CRYOGENIC VALVES

PRODUCT CATALOG

HABONIM
Industrial Valves & Actuators

PERFORMING IN DEMANDING APPLICATIONS

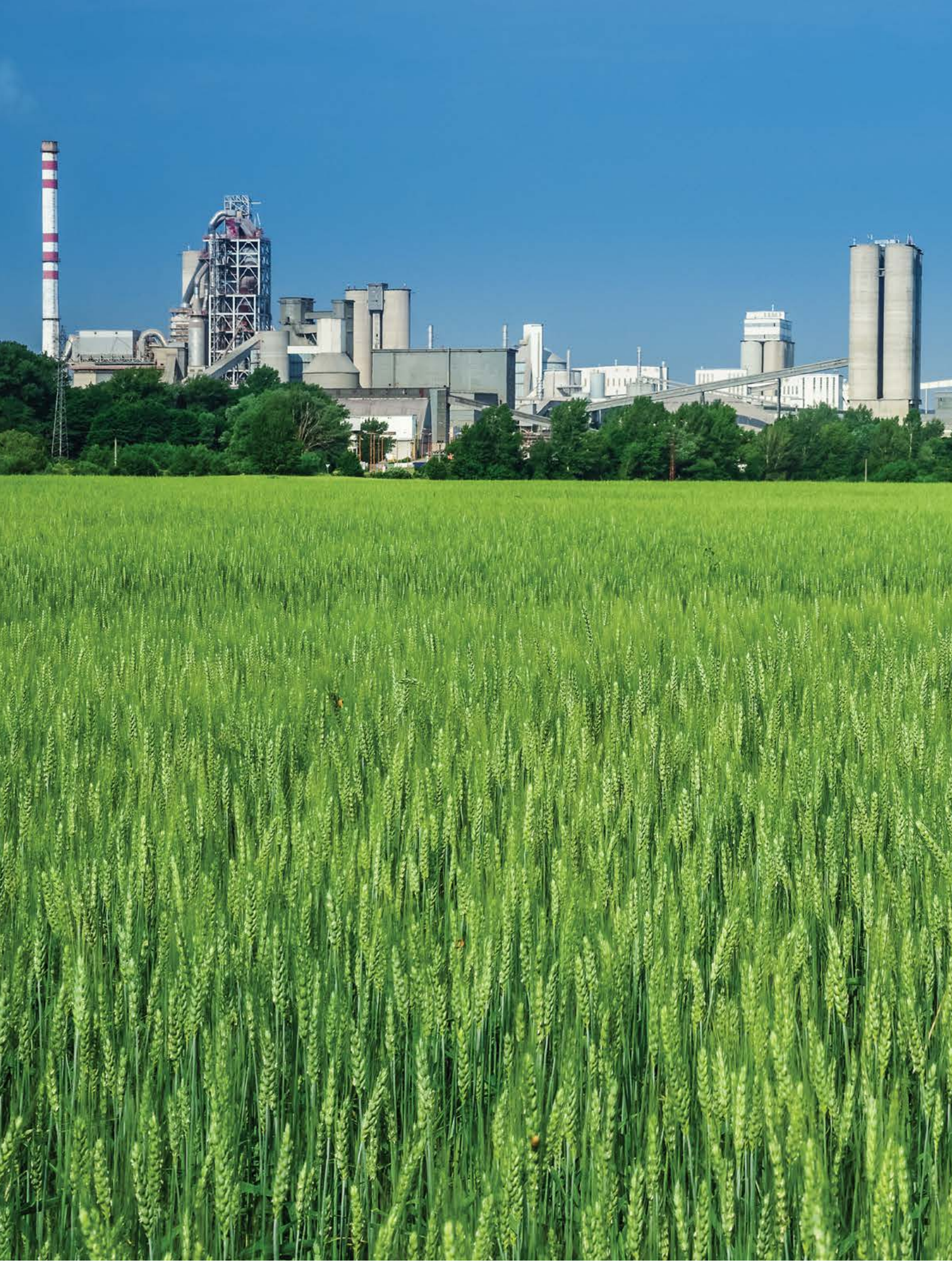

PERFORMING IN DEMANDING APPLICATIONS

Ball Valves & Actuators for the most demanding, challenging and hazardous applications is our passion and profession for the last 70 years. We believe in designing, manufacturing and supplying control and shutoff components and solutions that improves the overall safety, integrity and sustainability of the systems they are installed in.

Designed, manufactured and tested according to the highest standards, our products allow us to partner within systems that flows and control varied gases and liquids in divers markets especially where extreme temperatures and pressures are involved, hazardous materials are used and system performances are critical.

We are leading in cryogenic ball valve-based control solutions, emergency shutoff ,High Pressure and Severe Service and specially designed solutions. Believing that supplying and developing the most effective, safe and reliable products for the global leaders in the Gas distribution Sever Service and BioTech markets continually challenges us to improve our capabilities and products. Best coping with our prestigious customers' most challenging requirements technically, operationally and commercially is the outcome and our contribution to the development of these high end markets.

Table of contents

About Habonim 6

Habonim Valves 11

Cryogenic Valves 37

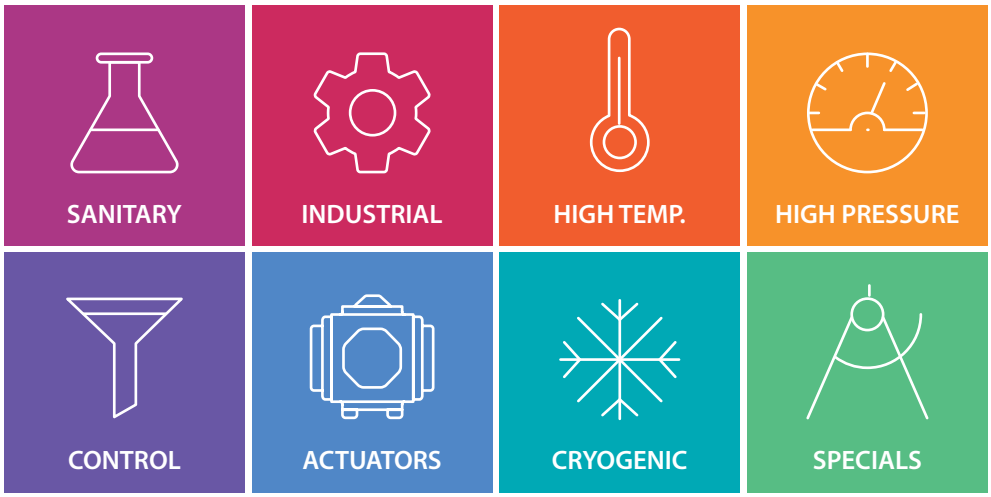

HOW TO USE THIS CATALOGUE

This catalogue provides information in a hierarchical structure starting from Habonim company general information, product families, product lines, product series and to a single product data.

When using information of any level, the aggregate information of the levels above would apply and should be taken into consideration where applicable.

Online version

A live and up-to-date electronic version of this catalog is available for online use and download on Habonim: www.habonim.com

In the case of discrepancies between the print and electronic versions, we recommend to use the latest version (the version date is printed on the back cover).

Proprietary note

This catalog is the exclusive property of Habonim Industrial Valves and Actuators Ltd. Any unauthorized reproduction of this catalog, in whole or in part, shall be prosecuted.

Disclaimer

The products and datasheets in this catalog reflect current Habonim standard production specifications. Habonim Industrial Valves and Actuators Ltd. Reserves the right to modify products and materials, including modifications undertaken to comply with specific customer requests and technical specifications without further notice.

PRODUCT FAMILIES

Temperature	
°C	°F
650	1200
600	1100
550	1000
500	900
450	800
400	750
350	650
300	550
250	480
200	390
150	300
100	200
50	120
0	32
-50	-58
-100	-148
-160	-260
-185	-300
-196	-321
-269	-450

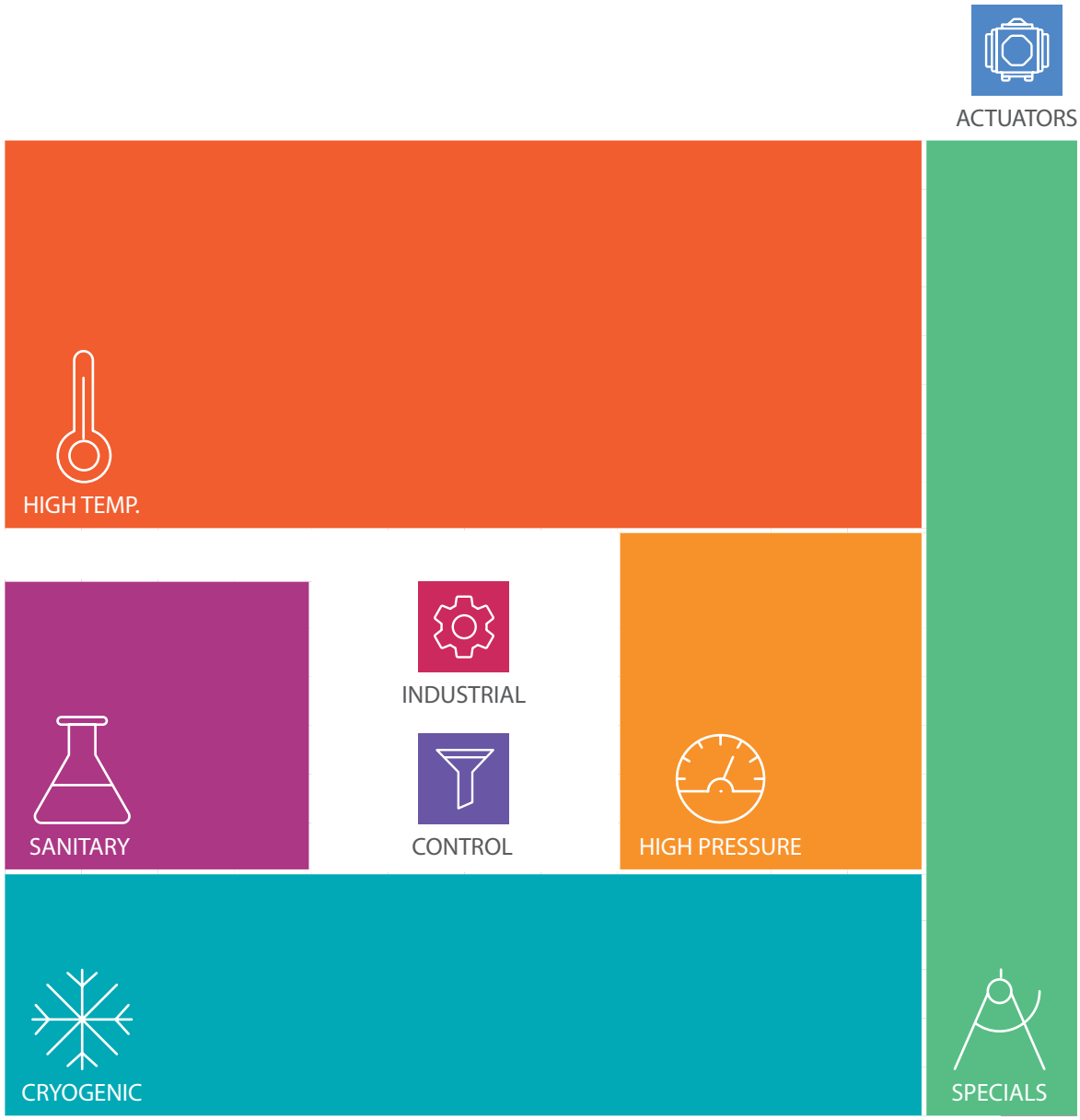

ASME Class			150		300	600	900	1500		2500		6000	
Pressure Bar	-1	0	16	20	40	50	100	150	200	250	350	420	700	1000
Pressure Psi	-14	0	230	290	580	750	1500	2250	3000	3750	5000	6000	10000	15000

ABOUT HABONIM

Sustainability, Safety and Health

Habonim management and employees around the world are dedicated to promoting, in every aspect of their work, the following principles and guidelines:

Sustainability

Habonim management pledges to comply with the relevant laws, standards, and regulations to preserve the environment and promote sustainability at company premises and in our products.

Safety & Health

Habonim aspires to a safe and healthy work environment, aiming for zero work accidents and promoting our employee's wellbeing. Management and the entire workforce comply with the relevant laws and regulations necessary to achieve this goal.

Operations

Habonim operates a global infrastructure to best support customers and projects by supplying our catalog standard products, specially adjusted catalog products and custom-made products and sub-systems. Ball valves, actuators and control packages are our core deliveries.

Standard Delivery

With the goal of offering our high-end products as well as our general-use products with best availability, best quality, cost-effectiveness and with simple communication, handling and operation, we mark selected items designated as Standared Offer in most of our product lines with the Green "Standard Delivery" mark in order to provide best availability and supply readiness.

Materials

Habonim uses and stocks metallic, polymeric and other materials used in our products, all sourced from well-recognized manufacturers with the required testing, certifications and documentation.

Heat numbers and materials certificates are managed throughout the manufacturing and assembling process to enable full backtracking for our product components.

Available Certifications, some supply as standard and some per request:

- Materials certificates per EN10204 type 2.2/3.1/3.2
- FDA / USP Class VI compliant for polymers, elastomers, and lubricants where applicable
- CE1935:2004 compliant for polymers, elastomers, and lubricants where applicable

Tagging, Traceability

Each product is tagged for traceability. For product identification, a stainless steel nameplate is placed on the product body.

Traceability of assembly and testing procedures, heat codes, and foundry identification as per B16.34 stipulations where aplicable.

ABOUT HABONIM

Cleaning, Assembling and Packing

Habonim manages different levels of cleaning, assembling and packing lines to meet different levels of end product and use requirements:

Commercial Service

Excessive hydrocarbon films, water, rust or mill scale, shop dirt, filings, chips or loose weld spatter is removed from the valve parts.

- Accessible surfaces are inspected for cleanliness by the naked eye under bright white light.
- Inaccessible surfaces are inspected and cleaned indirectly by wiping.
- A sticker on the package indicates the cleaning grade of the product.

Oxygen

A meticulous cleaning and assembly procedure eliminate the ignition hazards that can be caused by the presence of hydrocarbon oil, grease, and metal chips.

Our process of cleaning, assembling and packing refers to international standards in partial or in full:

- ASTM A380 • CGA G 4.1 • EN 12300

Habonim uses an environment friendly, alkaline-based degreasing process with controlled parameters. Valves are assembled in an oil-free restricted area by personnel who are specially equipped and trained to perform this task. The assembling area, work surfaces, equipment and tools are specially maintained to ensure cleanliness requirements are met.

- Valves are capped ends and plastic bagged
- A sticker on the plastic bag indicating "oxygen use

High Purity Service

Habonim offers as an option high purity ball valves for gas and water distribution, as well as chemical handling processes. Such valves are cleaned in accordance with CGA G4.1:

- Cleaning, drying and packaging under Class 100,000 conditions
- Assembly under Class 10,000 conditions
- No lubricants used
- 100% helium leak tested
- Capped ends and plastic bagged

Quality

Habonim strives to deliver quality products that meet and exceed customer expectations, providing complete and total satisfaction and to operate, instruct and train employees globally in light of standards such as:

- ISO 9001:2015
- CE PED 2014/68/EU (Module H)
- ATEX 2014/34/EU
- API SPEC Q1: 2013
- IEC 61508-2:2010 (SIL 2 / 3)
- TPED 2010/35/EU – for specific product lines
- SIL IEC 61508-1,2, 2010/35/ EU – for specific product lines

Habonim's management diligently monitors goals and objectives and continually enhances processes and products as well as the safety and environmental practices in light of the above.

Testing and Laboratories

Habonim operates a wide range of testing laboratories and equipment for ongoing and R&D needs and certifies products for cryogenic, high pressure, aggressive or clean, industrial use and more.

Habonim carries out external and internal testing and certification of products per customers' requests and market trends on a regular basis and offer a wide range of certified products for diverse certification bodies as but not limited to:

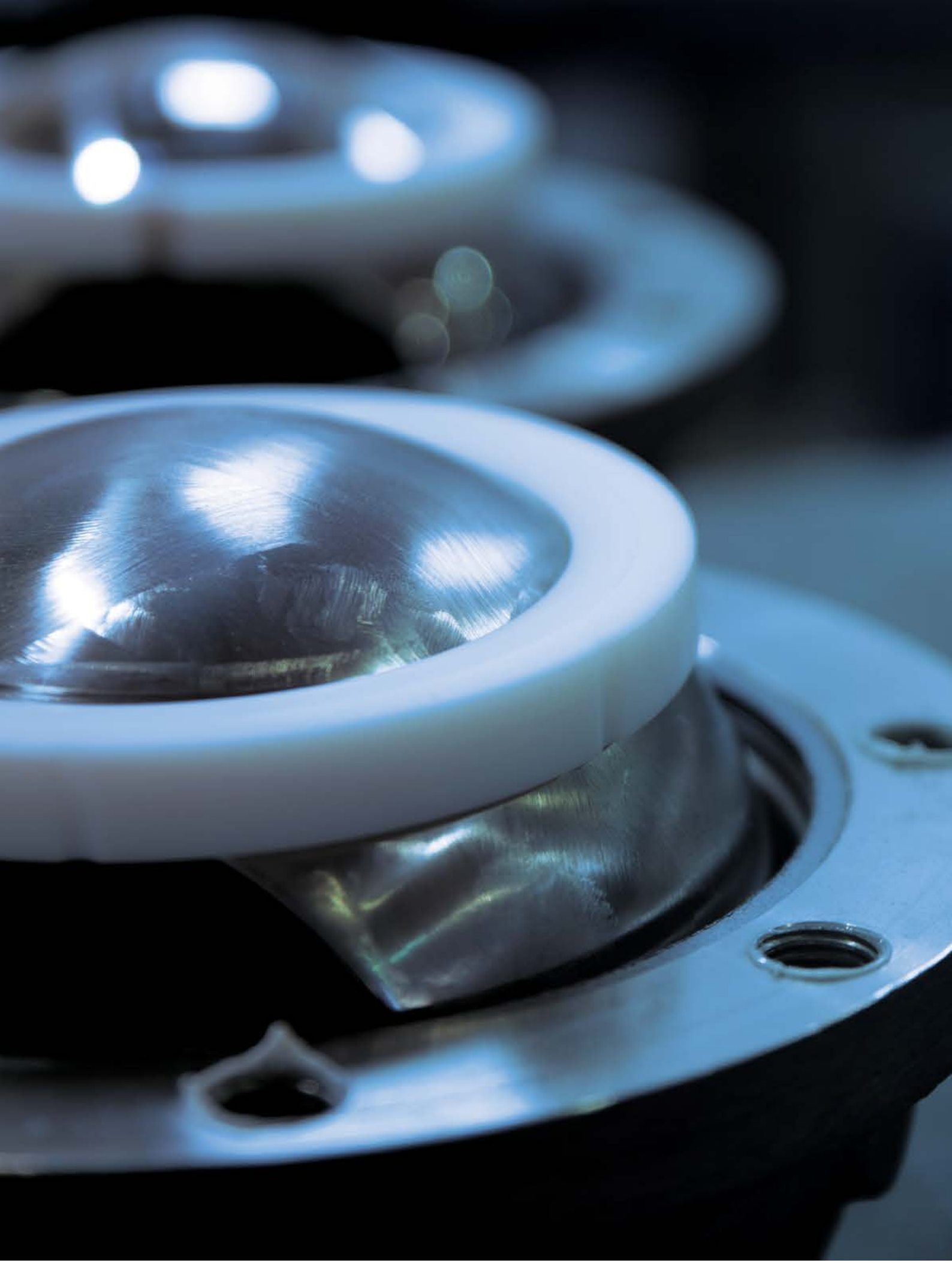

VALVES

Habonim Ball Valves 12

Valves Features 22

Cryogenic 37

HABONIM BALL VALVES

General

Habonim develops, designs, manufactures, tests, supplies and service ball valves for the global market and is globally leading in some segments of ball valve usage. With high-end products, uncompromised quality, serviceability and innovation to create solutions for the most demanding applications Habonim has gained a long track record of proven success. Habonim's ball valve product line supports extreme cold to extreme heat systems, industrial use up to very high pressures, and meets the specific needs and regulations of a wide range of industries.

Habonim ball valve product lines are subject to the company's regulation, methodologies and certification – for more information, see Habonim Introduction chapter.

Design and Engineering

Habonim designs its valves with accordance to international standards and guidelines in full, partial or with reference to. For some an external certification is available:

- API 6D (number 6D-1278)
- ASME VIII Div I
- ASME B16.34
- ISO 14313
- ISO 17292
- ASME BPE (48SER)
- ISO 15848-1, API641
- Fire safe design per API 607, ISO 10497, API6FA
- Antistatic design per ISO 17292

For relevant valves, Habonim complies or use as guidelines market leading standards such as, but not limited to:

- NACE MR-0175
- NDT/DT (according to ASME B16.34)
- MSS SP-55
- Polymers per TSE/BSE, BAM, FDA, USP, CE1935:2004

Testing

Habonim refers to the international standards for valve testing:

- API 598
- ISO 15848-2
- API6D
- EN 12266-1/2
- ISO 5208
- BS 6364

Strength/Valve shell leak test:

- 100% of valves are tested
- By usage of compressed air, nitrogen or water
- At 1.5 times of the declared pressure rating

In-Line Leak Test:

- 100% of valves are tested
- By compressed air, nitrogen or helium
- At 5-7 bar pressure
- Pass criteria:

  - Rate A result (bubble tight shutoff) for soft seated valves

Functional Test:

- 100% of valves are tested
- Torque is tested to design limits

Packing

Habonim valves are delivered as a standard as:

- Valve in open position
- Actuated valves are delivered in fail-safe position
- Ends are capped
- A firm, clean package packed by soft, clean, shock-absorbing material for transportation protection.

HABONIM BALL VALVES

Total Hermetix™

As a standard, most of HABONIM valves are equipped with the Total HermetiX integrity package comprised of three main elements and a superior inline sealing mechanisms in some of them:

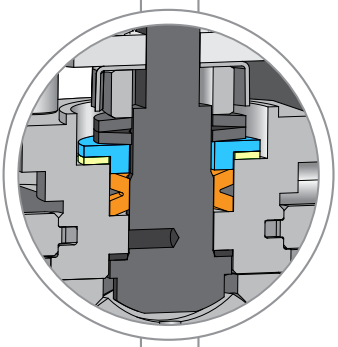

Zero fugitive-emission no maintenance stem sealing

- Patented HermetiX™ steam sealing design with zero fugitive emission sealing capability.
- Tested or certified according to ISO 15848-1 and API641 standards.
- Up to 500,000 cycles of operation.
- Field proven for millions of cycles continuous operation.

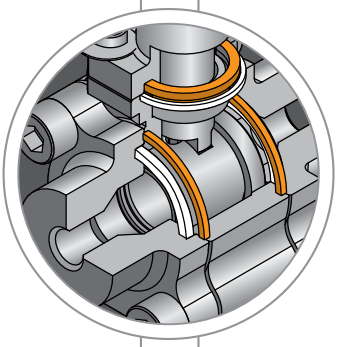

Double body sealing

- Body-to-ends & body-to-bonnet double sealing for superior sealing.
- Selection of sealing materials for diverse applications.
- Fugitive emission prevention.

Fire safe

- According to API 607 & ISO 10497.
- Type-tested and certified by leading certification bodies for marine service.
- Clean fire-safe construction guarantees no graphite contamination of the media flow.

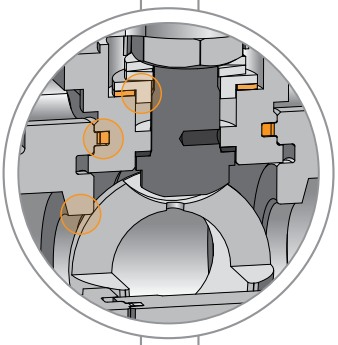

Superior In-line sealing

A variety of implemented mechanism provides extended in-line sealing capabilities such as:

- Bidirectional sealing
- High pressure full Δp sealing
- High & low pressure sealing
- others

Quarter Turn Valves - Introduction

Quarter-Turn Ball Valves design styles

HABONIM offers ball valves in a variety of design styles and technologies that is most effectively supports a wide range of applications and use cases. We offer Floating ball style valves and Trunnion-mounted ball style valves with several construction methods.

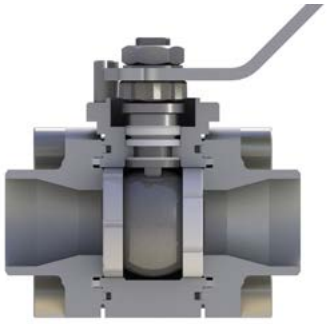

Floating Ball Valves design

The floating ball valve is the legacy style for ball valves, the most used and best fit for many industrial applications. The design places the valve ball between seats that holds it in place but without a firm connection to the valve body, hence, it "floats" inside the valve. Assuring a tight seal between the seats and the ball as well as the between the seats and the valve body guaranties the valve in-line sealing by a simple structure with minimal parts. As a rule of thumb, a floating ball valve should be considered as first choice wherever applicable.

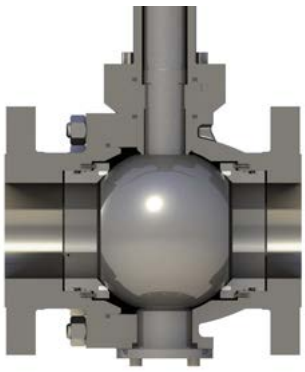

Trunnion-Mounted Ball Valves

In a trunnion-mounted valve, the ball rotates only around its vertical axis while being mechanically anchored to the top and bottom of the valve body. This construction balances the torques of the rotating ball and keeps it in a lower range than with similar sized floating ball valves by tolerating the heavy loads applied to the valve trim as a result of large sizes, high pressures and dynamic temperature cycles. The seats are compressed against the ball sphere by the force of the springs and by the line pressure, providing "double block" or "double isolation" capability to the valve. Trunnion-mounted ball valves are often used for larger sizes, higher pressure ratings and dynamic temperatures.

HABONIM BALL VALVES

Habonim Floating Ball Valve Designs

One-piece design

The standard-port, one-piece, solid-cast body and flange design ensures minimum leak paths. The valve complies with ASME B16.5 for flange dimension and ASME B16.10 for Face-to-Face dimensions. In the standard design, the valve flange raised face is serrated per ASME B16.11. The body includes an ISO 5211 integral mounting pad for easy automation. To facilitate easy assembly and maintenance, the valve is designed with one flange with a side entry that allows all inner parts to be positioned easily, and with a threaded plug that sets all parts under a precise preload with high repeatability. The result is optimum operating torque and bubble tight shut-off.It is possible to modify the ASME-standard flange connections by drilling the flanges to the EN1092 PN16 and PN40 standard. It is also possible to change one flange to a weld-end connection. A thermal jacket (steam jacket) over a one-piece design is the most efficient solution in applications where heating up the valve's outer surface (and the media inside) is mandatory to maintain media flow.

31 series | ASME B16.34 class 150 | Size ½"-8" (DN15-DN200)
32 series | ASME B16.34 class 300 | Size ½"-8" (DN15-DN200)

Two-piece design

This unique full-port two-piece solid-cast body and flanged end design supports high flow capacity. The Habonim two-piece design is available in ASME B16.10 for Face-to-Face dimensions and ASME B16.5 class 150 and ASME class 300 flange dimensions and also in EN 1092 PN16 and PN40. In the standard design, the valve flange raised face is serrated per ASME B16.11. The body includes an ISO 5211 integral mounting pad for easy automation. The valve is designed as a split construction which facilitates easy assembly and maintenance with standard tools. Tightening the end connector to the valve body via the body bolts preloads the complete ball-seat set, ensuring low operating valve torque, repeatability, and bubble tight shut off.

73 series | ASME B16.34 class 150 | Size ½"-8" (DN15-DN200)
74 series | ASME B16.34 class 300 | Size ½"-8" (DN15-DN200)
77 series | EN 1092 flanged PN16 | Size 3"-8" (DN80-DN200)
78 series | EN 1092 flanged PN40 | Size ½"-2 ½" (DN15-DN50)

Three-piece design

The forged, cast, or rolled bar 3-piece design is comprised of a body (center section) and a variety of end connectors (thread, weld, flange) to facilitate a wide range of construction configurations. The swing-out design of the center section allows the end connector to remain a fixed part of the pipe work while the valve itself can be maintained by swinging out the center section only.

26 series

| Full port, solid cast
| In full compliance with ASME B16.34 class 600 | Size 2"-8" (DN50-DN200)

27 series

| Standard and full port, forged or rolled bar
| ASME B16.34 class 2500 (wall thickness) | Size ¼"-2" (DN8-DN50)
| ASME B16.34 class 1500 (wall thickness) | Size 2½"-8" (DN65-DN200)
| Breakout torque to open under maximum Class 2500 differential pressure, for size up to and including 2" (DN50)
| Breakout torque to open under maximum Class 1500 differental pressure for size 2½" (DN65) and above
| Hybrid seats technology as an option

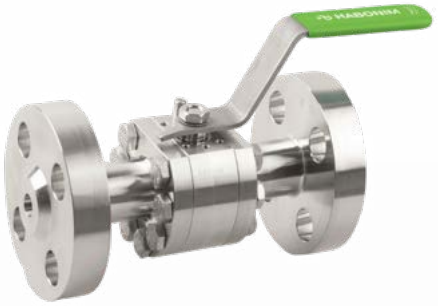

28 series

| Standard & full port, forged or rolled bar, robust design, with Hybrid seats technology
| ASME B16.34 class 2500 (wall thickness) | Size ¼"-8" (DN8-DN200)
| Breakout torque to open under maximum Class 2500 differential pressure, for size up to and including 2" (DN50)
| Breakout torque to open under maximum Class 1500 differential pressure for size 2½" (DN65) and above

47 series

| Standard or full port design, forged, cast or rolled bar
| ASME B16.34 class 900 (wall thickness) | Size ¼"-2" (DN8-DN50)
| ASME B16.34 class 400 (wall thickness) | Size 2 ½"-6" (DN65-DN150)

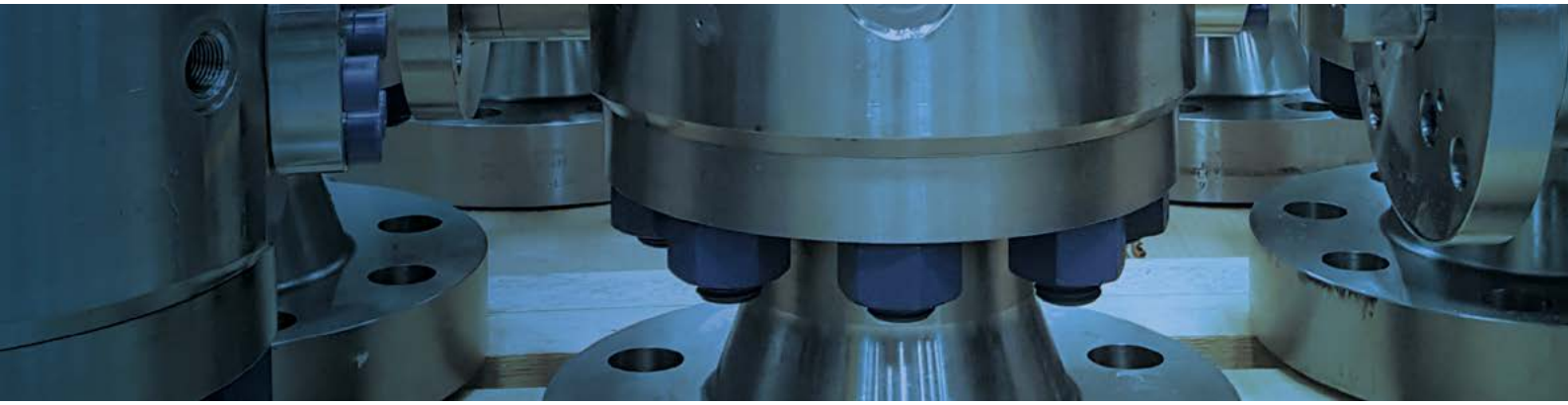

HABONIM BALL VALVES

Habonim Floating Ball Valve Designs

Multiport valves

Multiport valves are primarily used to simplify pipe and valve systems by replacing multiple two-way valves with a single multiport valve. They minimize dead legs, optimize drainability, simplify system validation and have a reduced envelope profile for easier installation. Multiport valves allow piping and machine engineers to design a simpler system that saves space and has fewer flow elements and leak paths. One multiport valve can replace multiple two-way valves and automation devices, and provides safe and easy changeover and flow shutoff, all within a confined space. Reducing the quantity of piping and fittings also means faster and more cost-effective construction. Available in a variety of flow patterns and directions and in both automatic and manual configurations, the design possibilities offered by the multiport valve are virtually unlimited.

61 series
| Multiport with three horizontal ports
| Additional bottom port available
| Standard or full port design, forged or cast
| ASME B16.34 class 600 (wall thickness) | Size ¼"-4" (DN8-DN100)

62 series
| Multiport with four horizontal ports
| Additional bottom port available
| Standard or full port design, forged or cast
| ASME B16.34 class 600 (wall thickness) | Size ¼"-4" (DN8-DN100)

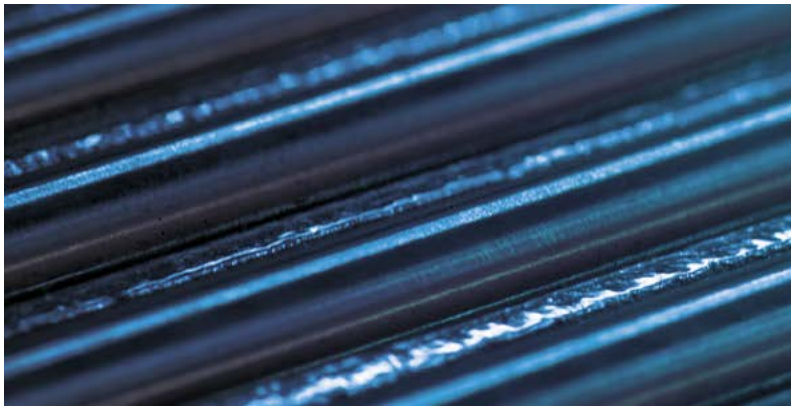

Diverter valves

Diverter valves are primarily used to split or combine process flows, or to switch medium among different pieces of process equipment such as pumps, filters, or whole pipelines Diverter valves provide reliable high flow rates in the most severe operating conditions, including vacuum conditions. They can also handle highly viscous media without the need for constant back-flushing. The diverter valves are available with different ball designs to accommodate a wide range of flow patterns. These flexible flow combinations reduce the number of valves in a system, thereby saving costs and facilitating easier control. Because all of the diverter valves have the same body Face-to-Face dimensions, they can be used with all standard end connections.

D31 series
| Bottom entry diverter
| Standard port design, cast
| ASME B16.34 class 150 (wall thickness) | Size ½"-8" (DN15-DN200)

S31 series
| Side entry diverter
| Standard port design, cast
| ASME B16.34 class 150 (wall thickness) | Size ½"-8" (DN15-DN200)

D32 series
| Bottom entry diverter
| Standard port design, cast
| ASME B16.34 class 300 (wall thickness) | Size ½"-8" (DN15-DN200)

S32 series
| Side entry diverter
| Standard port design, cast
| ASME B16.34 class 300 (wall thickness) | Size ½"-8" (DN15-DN200)

D47 series
| Bottom entry diverter
| Standard or full port design, forged or cast
| ASME B16.34 class 600 (wall thickness) | Size ½"-2" (DN15-DN50)
| ASME B16.34 class 300 (wall thickness) | Size 2½"-6" (DN65-DN150)

S47 series
| Side entry diverter
| Standard or full port design, forged or cast
| ASME B16.34 class 600 (wall thickness) | Size ½"-2" (DN15-DN50)
| ASME B16.34 class 300 (wall thickness) | Size 2½"-6" (DN65-DN150)

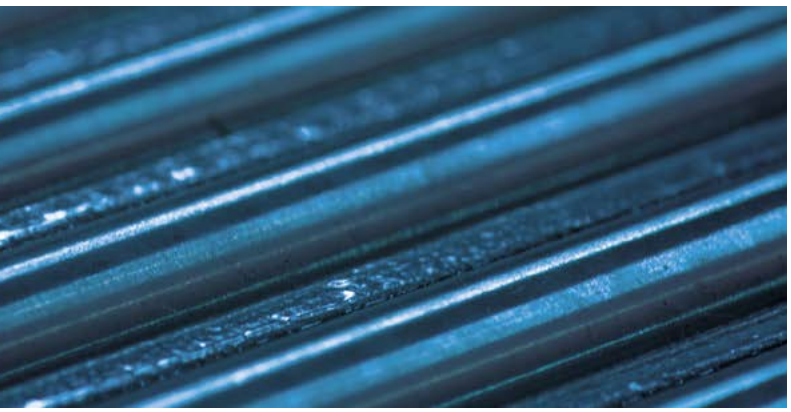

HABONIM BALL VALVES

Habonim Trunnion-Mounted Ball Valve Designs

Features:

- Specially designed to endure the harsh conditions of the oil & gas, petrochemical and other demanding applications
- Underground, Above ground, Offshore and Onshore installation
- Full differential pressure (Δp) per the valve pressure rating
- Manually applies a maximum operating force of 360N (80 lbf)
- Double block & bleed single valve capability
- Seats preloaded by Inconel 718 helical springs
- Antistatic grounding between ball, stem & body as standard
- Bi-directional flow
- Double Piston Effect (DPE) and Single Piston Effect (SPE) designs are both available
- Unique for 8" valve size and above:
  - Injection fittings for emergency stem or seat sealant & lubrication maintenance
  - Equipped with lifting lugs
  - Manually operated via gearbox
- Buttweld end valves may be supplied with extended spool pieces (PUPS) to avoid any risk of seat and seal damage during welding and post weld heat treatment operations

External finishing:

- Austenitic stainless steel valves are delivered in their natural finish
- Carbon steel valves are sandblasted and externally coated with a minimum of 180 micron epoxy paint.
- Other painting systems are available upon request

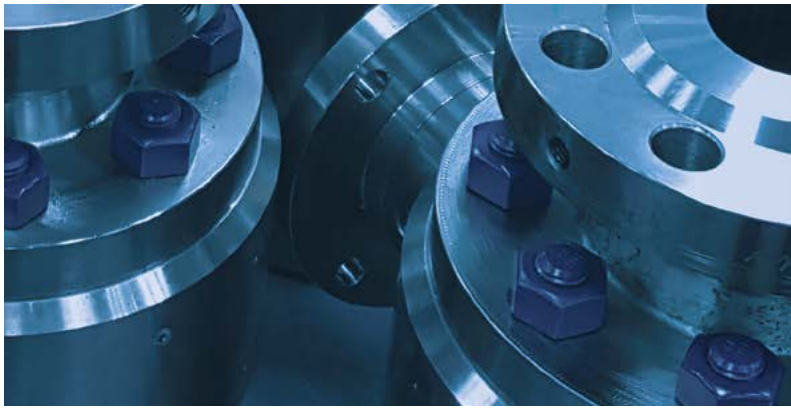

Two-Piece Design

The 2-piece cast trunnion-mounted ball valve designs are cost effectively support pressure ratings up to ASME Class 600, serving as the first choice where applicable with ANSI flange ends.

81 series | Full Port
| ASME B16.34 class 150 (wall thickness) | Size 2"-16" (DN50-DN400)

82 series | Full Port
| ASME B16.34 class 300 (wall thickness) | Size 2"-16" (DN50-DN400)

83 series | Full Port
| ASME B16.34 class 600 (wall thickness) | Size 2"-16" (DN50-DN400)

Three-Piece Design

The 3-piece forged body and end design is a robust heavy-duty design for pressure ratings up to ASME Class 2500 With ANSI flange, DIN flange or weald ends.

91 series | Full & Standard Port
| ASME B16.34 class 150 (wall thickness) | Size 2"-16" (DN50-DN400)

92 series | Full & Standard Port
| ASME B16.34 class 300 (wall thickness) | Size 2"-16" (DN50-DN400)

93 series | Full & Standard Port
| ASME B16.34 class 600 (wall thickness) | Size 2"-16" (DN50-DN400)

94 series | Full & Standard Port
| ASME B16.34 class 900 (wall thickness) | Size 2"-16" (DN50-DN400)

95 series | Full & Standard Port
| ASME B16.34 class 1500 (wall thickness) | Size 2"-12" (DN50-DN300)

96 series | Full & Standard Port
| ASME B16.34 class 2500 (wall thickness) | Size 2"-8" (DN50-DN200)

VALVE FEATURES

Fire Safe Design

Valves to be used in explosive or fire-hazard areas need to be (according to some standards and regulations) be designed to prevent in-line leaks for at least 30 minutes when exposed to flames and/or temperatures between 900 - 1000°C. In addition, after cooling down, a fire-safe valve has to be able to be cycled once and seal at an acceptable level of in-line leakage

Habonim fire-safe valves include body seals fabricated from graphite, which is well-known as a fire-retardant material. In the event of fire, the valve's soft seats melt and the ball is pressed against a metallic fire lip on the downstream end connector thus preventing in-line leakage. The fire also burns off the stem's thrust seal, causing the stem, which has a machined chamfer at its root, to be pushed up and form a metal-to-metal seal with the valve body and prevent leakage. For steam seeling Habonim is useing the patented HermetiX seal, a unique polymer-based graphite-free stem seal that, even after its polymer materials have melted, allows the stem to stay aligned and fully operable after cool-down. During normal operation, our polymer-based stem seal allows 500,000 operation cycles without maintenance, making it remarkably more durable than porous graphite seals, which have to undergo maintenance every 5,000 cycles without refurbishment. This design has been tested and certified to API 607 and ISO 10497 standards.

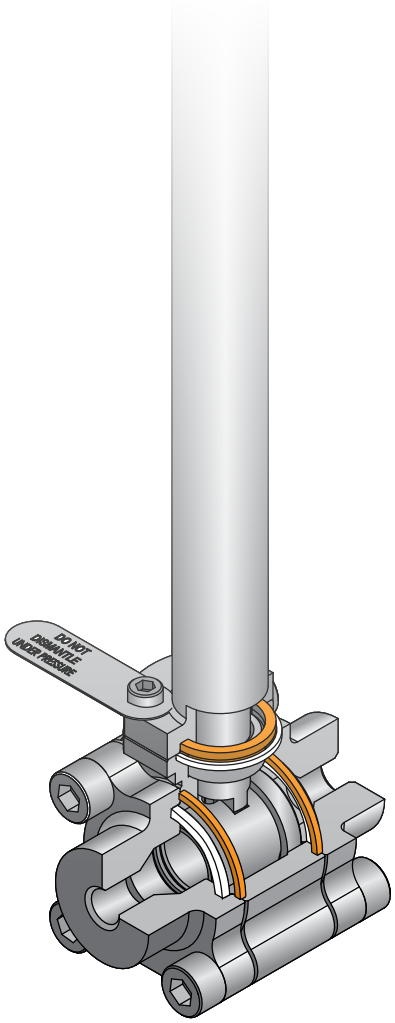

Tongue & groove body seal design

A 'tongue' machined on one side of the valve body and a matching 'groove' machined on the opposite side provides a perfect interlock system that precisely aligns the body and ends along the valve's center axis, thus increasing accuracy and repeatability during valve assembly and maintenance. The tongue & groove design is used most of our fire valves so that the expanded body seal is fully encapsulated and compressed in the event of a fire. The tongue & groove design forces fluid emissions to flow in a labyrinth pattern, thus ensuring zero leakage into the atmosphere.

Body bolts

Instead of long through-way bolts and nuts, all of our 3-piece fire-safe valves use double the number of one-size-up short bolts threaded into the body. In the event of fire these bolts minimize thermal expansion and prevent external leakage.

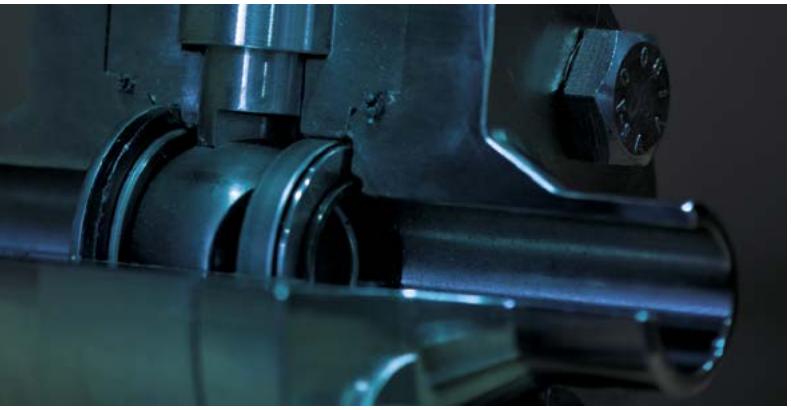

Ball Configurations

Our mirror-polished solid balls ensure tight shutoff and long service life. All balls come with specially rounded leading edges to eliminate excessive seat wear during rotation. Our balls technology can supports verity of metals (some are available only upon request) such as Stainless Steel 316 (CF8M), Alloy-C276, Alloy-C22, Monel 400, 254SMO, Duplex, Super Duplex, Inconel 625, Titanium and more. Ball materials when are other than Stainless Steel 316 (CF8M), are marked for clear identification.

There are different styles related to the ball port itself:

- Standard port ball (also known as reduced port) - The flow through the ball is one size smaller than the pipe's size resulting in a flow area smaller than the pipe's area. The reduced flow area increases the flow velocity (assuming a constant flow discharge) and the head-loss over the valve.
- Full port ball - Has an over-sized ball so that the ball's port is larger or equal than the pipe port, thus reducing friction loss. Flow is unrestricted but the valve is larger so full-port balls are typically used where free flow is particularly important such as in pipelines that require pigging.
- Tube size ball (also known as true port) has a port which is identical to the tube's inside diameter. This configuration is used mainly in the pharmaceutical industry where dead legs and pockets of contamination are unacceptable.

Pressure equalizing hole

Balls typically have a hole in the stem slot to equalize the pressure over the ball sphere. The pressure inside the ball port and the pressure in the valve cavity are identical and hence no stress is applied to the ball sphere. The pressure equalizing hole is eliminated in the following cases:

- High surface finish requirements, mechanically polished or electro-polished
- Diverter valves
- Valves with cavity filler seats
- Double block and bleed valves
- Pharmaceutical or other applications with very high sanitary requirements

Minimum stress on the ball by adding a pressure equalizing hole

VALVE FEATURES

Ball Configurations

Cavity pressure relief

This safety feature is for valve applications where a trapped cavity must be avoided. Habonim uses a 3 mm hole is included in the upstream ball sphere so that any pressure that builds up in the valve cavity will be released into the upstream pipeline. The use of a cavity pressure relief hole feature is mandatory when using ammonia, chlorine or any other liquid media that is at risk of transforming into a gas and thus elevating the pressure within the valve cavity in an uncontrolled manner. A valve which includes the 'P250' code will always be unidirectional, and will include an arrow flow plate attached to the valve body. Improper installation in the opposite direction will cause an in-line leak.

3 mm relief hole face the upstream

'C' Ball

Habonim offers a two-way ball with its upstream sphere completely machined through the ball port and thus has a C shape. This feature is mainly used where media tends to crystalize on the upstream ball sphere such as, for example, molten sugar or baked ground coffee. When a standard valve is in the closed position and a solid layer has adhered to the ball's upstream sphere, subsequent valve operation will erode the upstream soft seat, loosen the pre-load of the ball seats set, and rapidly degrade the valve's functionality. With a 'C' ball media solidification is impossible as there is no surface area on which the media can accumulate. The upstream seat withstands the media unscratched; the pre-load of the ball seat set as well as the functionality of the valve remain intact for a longer period of time.

Upstream sphere completely machined in a 'C' ball

Multiport and diverter ball

Multiport and diverter ball designs are used primarily to split or combine process flows or to switch medium between alternative pieces of process equipment. The diverter ball configuration can be either bottom entry or side entry. The diverter ball has the same sphere diameter as standard 2-way balls so the same soft parts can be used. Multiport balls have numerous flow configurations, which are described in detail in the Multiport chapter of this catalog. The multiport ball has a larger sphere diameter than a diverter ball, allowing a firm grip of four seats vs. two seats in the diverter configuration.

Diverter ball with isometric T port construction

V-Ball

The V ball is used in control valve solution for less demanding applications, such as clear liquid at a maximum pressure drop of 6 bar (87 psi), or clean gas at a maximum pressure drop of 10 bar (145 psi), and maximum temperatures of 120 °C (248 °F) for either. The V ball design is comprised of a floating characterized ball, mounted between two seats, which maintain a trim preload and bubble-tight shut-off and low torque demand. V-Balls come in a variety of 'V' and 'slot' shapes, and can be custom designed to meet any control requirement. The V-Ball is available in a wide range of high-alloy materials and coatings for highly corrosive applications.

Characterized ball for flow control applications

Downstream pressure relief ball

Habonim ball downstream pressure relief is designed with a diagonal hole in the downstream sphere toward the bottom of the ball. In the open position the flow runs smoothly through the valve. When the valve is closed the downstream pressure is vented through the diagonal tunnel and out via a third port incorporated into the valve body so that the relieved pressure can be diverted safely to a secured area. This feature is mainly used for pressure gauges and instrumentation service. This design eliminates the need to install an additional downstream pressure vent valve.

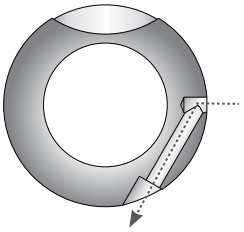

Special diagonal tunnel vents downstream pressure when the valve is closed.

CIP/SIP

Habonim 'CIP' ball code is mainly used in sanitary and biopharm applications. in clean applications the main ball valve problem is contamination caused by impurities trapped in the cavity between the ball's outer sphere and the valve body's inside diameter. To overcome this problem Habonim has designed a special ball that allows the stream to clean the valve cavity thoroughly during the CIP/SIP process, with the valve in the full open position. The bottom line: Bidirectional and streamlined flow with a high Cv, and self-cleaning of hidden cavities.

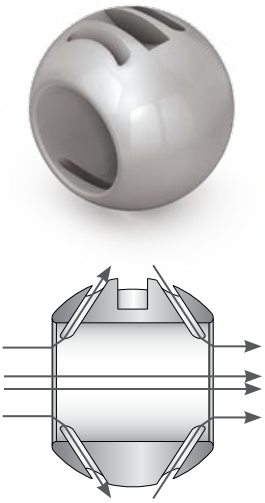

With the valve in the open position, special tunnels flush the valve cavity constantly

VALVE FEATURES

Seat Configurations

Standard seat

A flexible, precision-machined seat that provides the highest seal capabilities (EN12567 Rate A) in high pressure and vacuum conditions. Its unique design reduces valve torque, facilitating a more compact, lower-weight automated package. The design also reduces wear, thus extending the life of the seat. The seat perimeter has pressure-equalizing slots to allow pressure to penetrate into the body cavity for better sealing and for avoiding upstream seat collapse into the valve cavity while turning the valve ball from the open to closed position under high differential pressure.

Standard seat

Self-Relieving-Seat (SRS)

The Self Relieving Seat (SRS) is used mainly in syltherm and dowtherm services in the chemical and biopharm industries. Both syltherm and dowtherm have a high thermal expansion coefficient and in trapped cavities (such as when the valve ball is in its closed position) even a moderate temperature increase will cause dramatic pressure build-up that can cause cessation of valve operation, seat swelling, and even valve shell failure. The SRS is designed to flex and allow the trapped pressure to escape into the pipeline, while shutting off as soon as the peak pressure is relieved. The pressure relief is achieved by a special internal groove that is machined into the seat radii facing the ball. Additional radial grooves enable the pressure to bypass the ball and access the internal groove. The seat sealing surface is in the central internal section and provides tight shutoff. The outer section of the seat above the internal groove gives the support needed to the ball when higher line pressure pushes the ball toward the downstream seat, thus preventing "crushing" of the seat.

Self-Relieving-Seat (SRS)

Diverter seat

A diverter valve must seal the pressure at the upstream side, which contradicts the traditional floating ball mode of operation (where sealing is typically done on the downstream seat only). Habonim's solid one-piece seat-seal design blocks the flow through the back of the seat, generating an upstream seal. Diverter seats can be used with differential pressure up to ASME Class300. For higher differential pressures use either a diverter valve with hybrid seats, or a dual floating ball valve integrated into a one block or trunnion mounted valve.

Diverter seat

Hybrid seat

When a soft seated floating ball valve is held even momentarily at mid position, the upstream seat is only partially supported by the ball and can be pushed towards the valve cavity by the force of the stream. This deformation is amplified with increased media density, high differential pressure and/or high velocity. Under these extreme conditions the deformation can: cause the ball to grip the unsupported area of the soft seat and jam the valve; slice the seat by the port edge of the ball; or trigger stem twisting (caused by excessive torque applied by the operator trying to close the valve). Habonim's line of Hybrid seats were developed especially to overcome the problems posed by high differential pressure applications. The combination of a metallic housing and polymer insert offers the stiffness of a metal seat with the bubble tight shutoff leakage rate and operating torque of a soft seat. Different hybrid seat designs were developed to meet the needs of different applications, and are designated by the metallic housing design.

Hybrid seat

Seat Configurations

Cavity filler seat

The cavity filler seat is used mainly in the biopharm and pharmaceutical industries. The design minimizes crevices and gaps between the ball and the valve body, thus reducing the risk of trapped contaminants. Because the valve body is specially machined with a larger bore diameter to fit the special cavity filler seat dimensions, they cannot be retrofit into a standard valve body. The cavity filler seat is a one piece seat-seal design and is therefore suitable for use with the Habonim 3-piece product line.

Note: A valve with a cavity filler seat cannot be used in fire-safe service.

Cavity filler seat

Metal seat

Habonim metal seats are used for extreme service applications where high temperature, abrasion and/or corrosion restrict the use of soft seats. The metal seats are mate lapped with the ball for enhanced engagement and sealing. A variety of surface treatments and coatings can be applied to the seat's outer surface to withstand corrosion, galling and other forms of wear.

Metal seat

V-port seat

Superior control performance and accuracy is designed into the geometry of the downstream V-port. The precision wire cut 'V' shape of a metal seat, enables equal percentage flow characteristics, while S-port design ('Slot') provides linear flow characteristics. V-Port valve assembly, comprised of a ball and wire cut metal seat, lapped together into a single seamless component. V-port design provides the high rangeability and precision throttling required for clean or dirty liquids and gases, as well as fibrous suspension applications. The streamlined flow passage allows for high recovery, maximum efficiency and excellent erosion resistance.

V-port seat

VALVE FEATURES

Stem Design

A crucial component in a quarter-turn ball valve is the stem, which transfers the torque from the operator to rotate the ball and control its movement. The stem geometry and surface finish is crucial to minimize stem leak and maximize ease of operation. The stem is a dynamic element and, in most cases, is the only element that protrudes from the pressure vessel and is thus subject to safety issues as well. Habonim's robust stem design complies with ASME B16.34 and API 6D and can endure at least twice the valve's nominal torque. To solve a major safety issue, the stem is designed to be "blowout-proof". Because it is inserted into the valve body from within, the stem will not release under pressure. All Habonim stems are, by default, fire-safe design. A special chamfer is machined at the root of the stem so that, in the event of fire, the stem is pushed upwards and seals against the valve body - metal to metal engagement. Various stem materials are available, from austenitic stainless steel to nickel alloys, to titanium for light and moderate torque requirements, and for high cycle applications or high torque demands. The stem top planes for valve sizes ½" (DN15) up to 2½" (DN65) are typically a Double-D shape, while 3" (DN80) stems and above typically have a square shaft (although a Double-D stem can be provided upon request by adding the 'WR' suffix to the valve description).

Anti-Static Design

An anti-static device provides for electrical continuity between the body, ball and shaft of the valve and is used to discharge static electricity buildup on electrically isolated balls. According to the EN ISO 17292 standard, all valves with a size up to 2" (DN ≤ 50) require a stem/body contact, while larger valve sizes also require a ball/stem contact. The anti-static feature shall have electrical continuity across the discharge path with a resistance not exceeding 10 Ω from a power source not exceeding 12 VDC when type tested on a new, dry, as-built valve after pressure testing and cycling of the valve at least five times. The Habonim anti-static device, in which contact is made via a spring loaded stainless steel element, complies with EN ISO 17292 and is, in fact, built-in to all Habonim valve product lines, without exception.

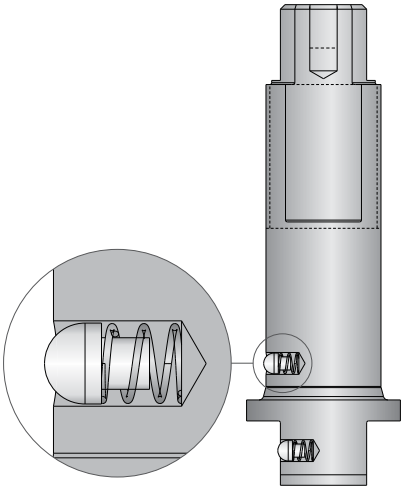

Anti-static design

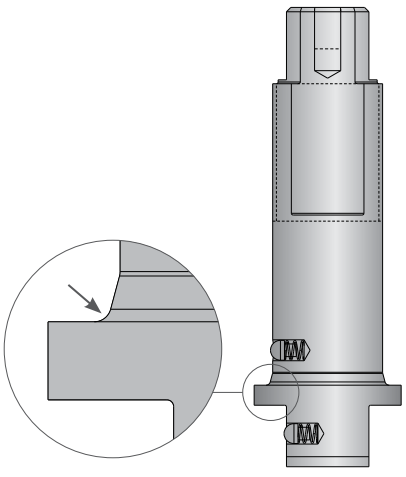

Stem design

Stem Seals

The valve trim - and the valve stem seal design in particular - determine the quality of a valve. The stem seal must perform two tasks: keep the media within the boundaries of the pressure vessel, and allow uninterrupted leak-free continuous open/closed quarter-turn rotation.

Unlike the valve body's static seal, the stem seal is subject to dynamic operation of the valve, as well as to side loads resulting from actuator misalignment or from the operator forcing the handle incorrectly. The valve trim typically comprises two Belleville springs assembled Face-to-Face, which preload the stem seal. This self- adjusting mechanism compensates for wear and pressure/temperature differentials - ensuring a leak-tight seal and extended service life. Habonim's trim design for heavy-duty service, such as high cycle applications, uses four or even six sets of Belleville springs so as to maintain preload over a longer operational cycle life. The Belleville springs are compressed by the stem nut, which is locked to prevent unintentional release during cycles.

Habonim's stem seal design, consisting of a live-loaded carbon-filled PEEK thrust bearing and anti-abrasion ring combined with a carbon filled-PTFE stem seal, significantly increases valve cycle life over conventional ball valves and extends the time between adjustments.

VALVE FEATURES

Stem Seals

Graphite-free fire safe HermetiX™ stem seal

The patented HermetiX™ stem seal is named for its distinctive "X"-shaped design. The flexible "X" shape creates a dynamic sealing arrangement so that, in the event of pressure buildup or side load, the HermetiX™ adjusts dynamically to prevent fugitive emissions. The result is a superior stem seal design compared with the conventional flat stem seals currently available on the market.

The HermetiX™ Fire-safe. This patented design includes a polymer based stem seal and a unique fire safe certified construction. The graphite-free stem seal, suitable for use in hazardous industries such as chemical, petrochemical, oil & gas, Food & Beverages is designed to operate for 500,000 cycles without refurbishment. The HermetiX™ fire safe valve offers the ultimate solution - an exclusive graphite free stem seal that eliminates the risk of graphite disintegration after prolonged valve cycles, protecting both line materials and air quality. The HermetiX™ fire safe valve meets the requirements of fire-safe API 607 / ISO 10497 standards, as well as the stringent ISO 15848-1 standard.

Features

- Prevents media contamination from graphite particles
- FDA, CE1935:2004 approved polymer or other materials is available upon request
- Fugitive emission certified to ISO 15848-1 and API 641
- Habonim patented desing
- Designed to operate for 500,000 cycles without refurbishment
- Prevents media contamination from graphite particles
- Ensures uninterrupted production
- Increases site safety
- Anti-static as standard

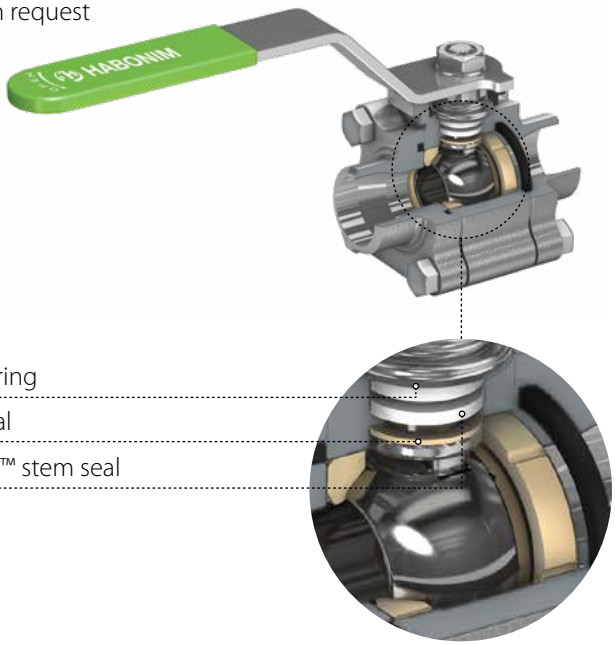

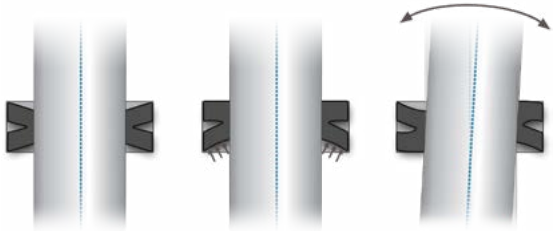

No pressure Pressure build-up Side load

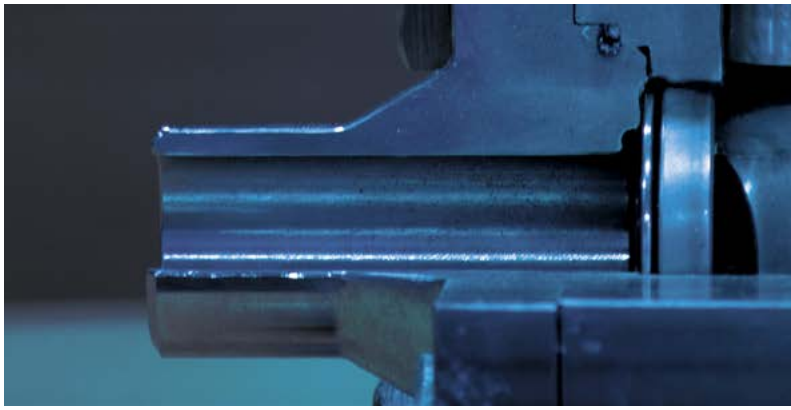

High Cycle (HC) Stem seal

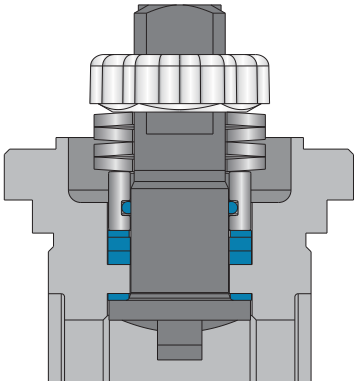

High cycle service is defined by Habonim engineering as continuous operation for more than one hour at a frequency greater than 1 cycle / 180 seconds.

When designing a valve for high cycle service parameters, such as heat dissipation due to friction of metallic and plastic parts, resistance to fatigue stress, and mean time between maintenance activities must be taken into consideration.

For high cycle applications Habonim recommends the use of valve stems made of high tensile material. The stem will be polished for a high degree of surface roughness. The stem thrust seal will always be made from highly wear-resistant plastic material. A Viton O-ring is inserted into a customized follower. The complete trim assembly is preloaded by a double or even triple Belleville spring stack. All of these design features give the valve a particularly long service life.

Spring-less stem seal

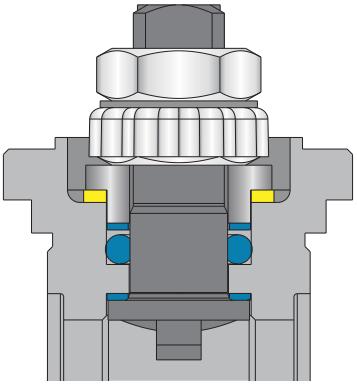

In a corrosive application where standard Belleville springs cannot be used, Habonim recommends a cost effective solution: an O-ring based stem seal with a unique L-shaped follower positioned on a durable polymer slide bearing. The special follower accurately aligns the stem in place for concentric rotation of all trim parts. An elastomer O-ring fabricated from a variety of materials is compressed between the polished stem and the body. The stem nut is secured with a lower torque compared with spring loaded stem seals, resulting in a lower operational torque requirement.

NOTE: It is always advisable – and especially when using elastomers – to verify the materials temperature and corrosion compatibility with the application

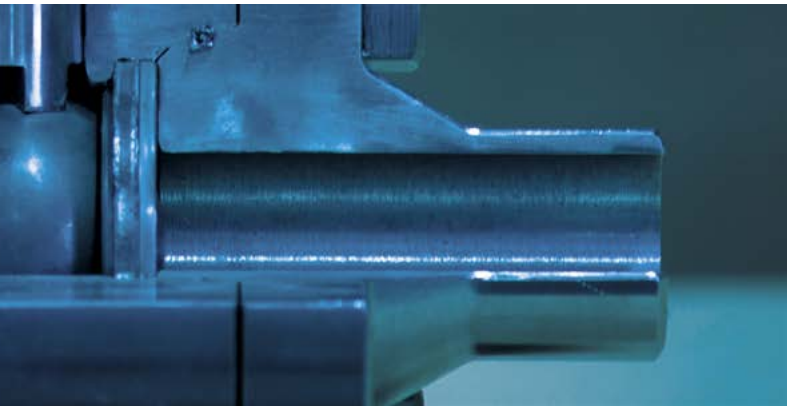

VALVE FEATURES

End Connections

Habonim offers a variety of end connections for its 3-piece valves, supporting the industry standard connections for piping in diverse applications and geographies.

NPT / BSPT / DIN2999 / DIN3852

Female thread end designed to ASME B1.20.1 NPT EN 10226-1 BSPT/DIN2999/DIN3852 and more

MNPT / MBSPT

Male thread end designed to ASME B1.20.1 NPT EN 10226-1 BSPT/DIN2999/DIN3852 and more

BW

Buttweld end for various pipe schedule - designed to ASME B16.25, EN12627-4, BW code stands for buttweld schedule 40, for different pipe schedule BW should be followed by the relevant schedule number (5,10,80,160)

SW

Socket-weld end one piece solid cast designed to ASME B16.11 and EN 12760. Leaving a 1 mm gap (average) between the pipe end and the socket inner plan is a common welding practice to avoid internal stress due to thermal expansion during the welding process

XBW

Extended buttweld end for various pipe schedule - one piece solid cast - special design for in-line welding save labor cost and keep the integrity of the product factory tested.

XSW

Extended Socket-weld end one piece solid cast - special design for in-line welding save labor cost and keep the integrity of the product 'factory tested'

LL / LM

Compression ends for metric (code LM followed by the tube OD in mm) or imperial (code LL) tube dimensions. mainly used in instrumentation services, with sizes up to 1" (DN25)

LL / LM Exploded view

Compression end normally supplied as a set with a machined end, ferrule, backup ring and a nut. Habonim suffix 'W/O NF' exclude the extra parts from the product bill of material.

TC/TCI/TCD

Tri-Clamp end - designed to ASME BPE (TC) standard, allows fast connection or removal of the valve from the line. Mainly used in the pharmaceutical and food & beverage industries.

BWO / BWI / BWD

Buttweld end for various tube standards - designed to ASME BPE (BWO), ISO 1127 (BWI) and DIN 11850 (BWD). The length of this end doesn't allow the use of orbital welding.

ETO / ETI / ETD

Extended buttweld end for various tube standards - designed to ASME BPE (ETO), ISO 1127 (ETI) and DIN 11850 (ETD). One piece solid cast with sufficient length to allow the use of orbital welding.

Grayloc©

Grayloc© compatible hub designed to fit an opposite hub for an easy low or high pressure connection Using a self-energized seal (Grayloc© is a registered trademark of Grayloc Products, L.L.C.)

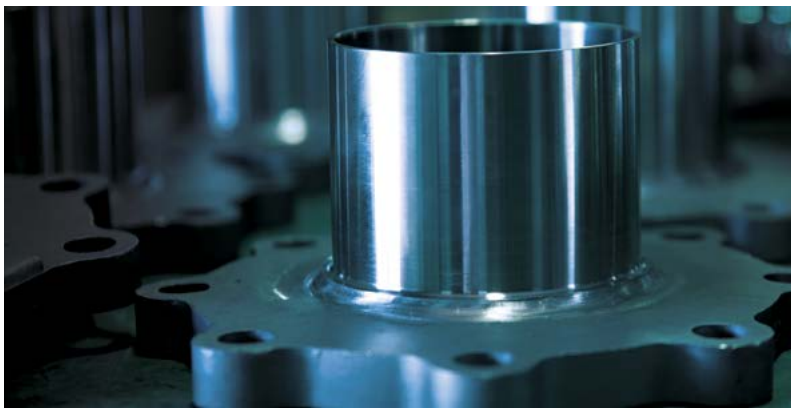

VALVE FEATURES

Handles

A valve handle is the interface between the operator's hand and the valve trim. Habonim's handles are designed for safe operation, with a firm and comfortable grip. To facilitate ease of operation, the handle length ensures that the maximum force required at the handle-end to apply the breakaway torque will never exceed 360 N (80 lbf). The handles are manufactured in a variety of technologies: casting, forging, punching, and laser cut and welding. The standard materials are zinc plated carbon steel and stainless steel. Habonim's range of handle designs addresses the diverse needs of multiple applications.

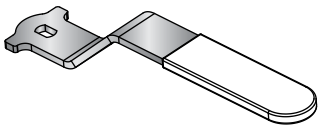

The 'SHARK' handle

Habonim's standard handle for valves with an ISO 5211 top pad.

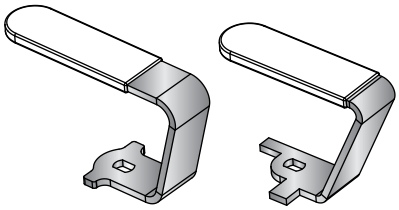

The 'SCORPION' handle

Habonim's special handle for confined spaces. There are two types to accommodate valves with or without an ISO 5211 top pad. To specify a valve with the SCORPION handle add the '-SCRP' suffix to the valve code.

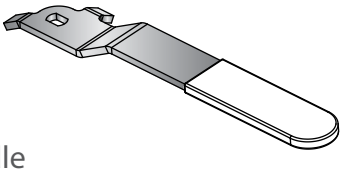

The 'POINTER' handle

Habonim's standard handle for valves without an ISO5211 top pad.

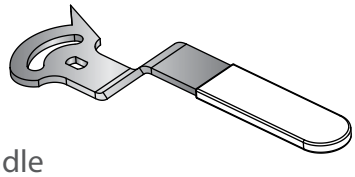

The 'ADJUSTABLE' handle

Habonim's special handle for manually controlled valves. It is supplied as part of a kit that includes a lock-in-place mechanism and a mirror-polished scale for clear identification of the valve's angular position. To specify a valve with the ADJUSTABLE handle add the '-ADJ' suffix to the valve code.

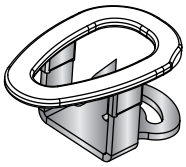

The 'OVAL' handle

Habonim's special handle designed to avoid unintentional movement of the valve handle. It is also used in confined spaces where the handle must not protrude beyond the valve's Face-to-Face plate. To specify a valve with the OVAL handle add the '-OVL' suffix to the valve code.

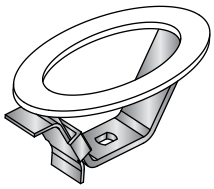

The 'OVALD' handle

Habonim's OVAL handle design with a sliding plate locking device. To specify a valve with the OVALD handle add the '-OVLD' suffix to the valve code.

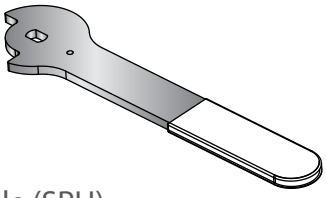

The Spring Return Handle (SRH)

An extra thick handle design to withstand the severe impact during valve closing. This handle is part of the SRH unit.

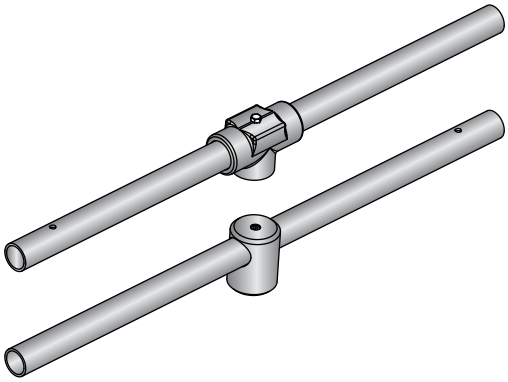

Habonim's standard handle for large valves (2½" and above)

Habonim's standard handle for large (2½" and above) cryogenic, high pressure and metal-seated valves, and for large (3" and above) standard valves. It provides a firm grip and smooth operation. The maximum force required at the handle-end to apply the breakaway torque shall not exceed 360 N (80 lbf). Habonim supplies valves with 2½" standard port and above for manual operation with handles attached to or packed with the valve. (with the exemption of 47 series which is for 3" standard port and above). If the valve is to be automatically actuated, Habonim removes the handle and prepares the valve stem seal accordingly. To specify a valve prepared for automated actuation, add the '-BS' (bare shaft) suffix to the valve code. The '-BS' suffix does not apply to valves size up to and including 2.

CRYOGENIC VALVES

Trunnion

Top Entry 43

3 Piece 49

2 Piece 59

Floating Ball

3 Piece 67

High Pressure | 3 Piece 77

Multiport / Diverter 83

Flanged 91

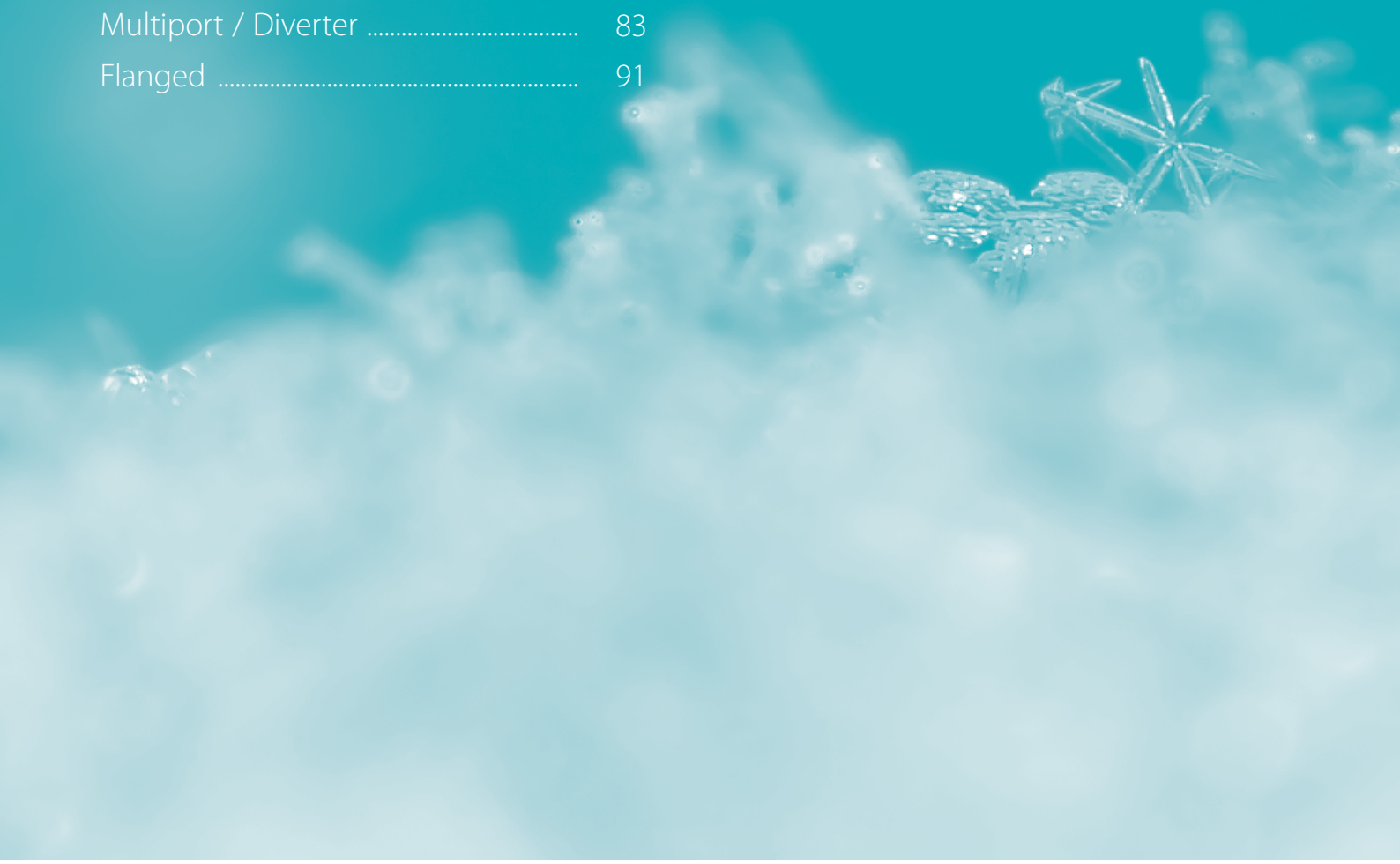

CRYOGENIC VALVES

General

Habonim's cryogenic product line valves are subject to the general Habonim valves design, materials, practices, methodologies and certifications – for more information, see Valves General chapter.

Habonim cryogenic valves are equipped with the Total HermetiX integrity package for superior sealing, safety and environmental care.

Cleaning, Assembling and Packing

Cryogenic Service

A meticulous cleaning and assembly procedure eliminate the ignition hazards that can be caused by the presence of hydrocarbon oil, grease, and metal chips. Habonim uses an environment friendly, alkaline-based degreasing process with controlled parameters. Valves are assembled in an controlled area by personnel who are specially equipped and trained to perform this task. The assembling area, work surfaces, equipment and tools are specially maintained to ensure cleanliness requirements are met.

- Valves are cleaned and degreased for oxygen service
- Valves ends are capped, valves are plastic bagged
- A sticker on the plastic bag indicating "cryogenic use"

Quality

Reference standards

- Design, testing & inspection according to BS 6364:1984 (amendment 3)
- Testing EN 14432:2014
- Testing EN 1626:2008 (per request)
- NDT per ASME B16.34 - optional

Diverter valve

Multiport valve

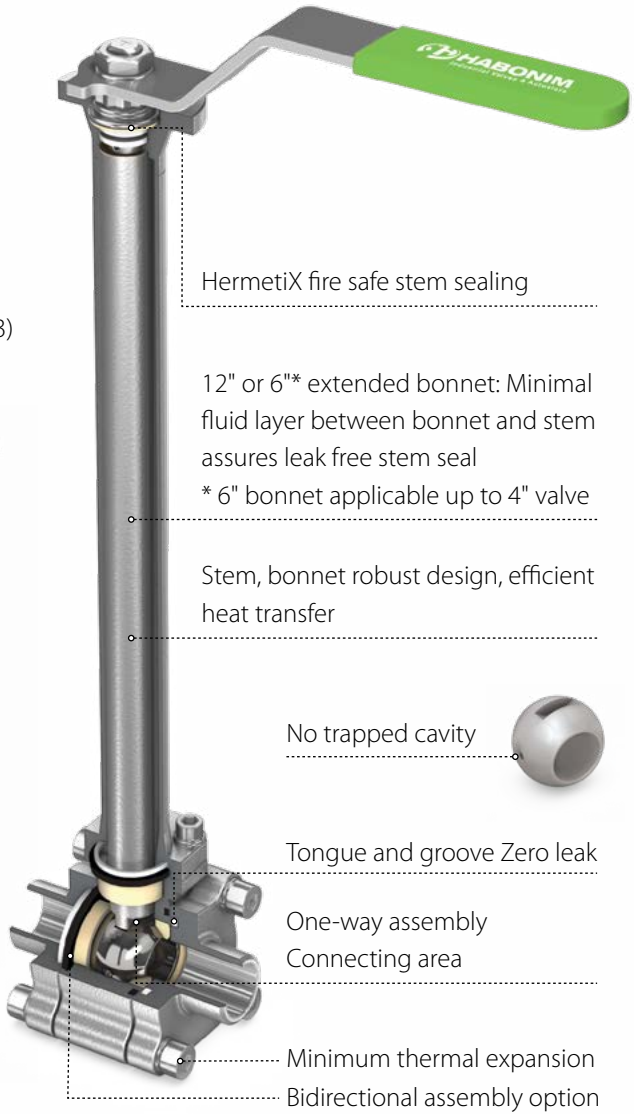

Quick Selection Table

Total Hermetix™ | **Port:** Standard Port | Full Port | Tube Size | **End Connections:** Threaded | Flanged | Welded

Temperature: Cryogenic Down to -269°C (-452°F)

Ball Valve	Design Type	Series	TH	Port	End Con.	Valve Size (Inches) ¼	⅜	½	¾	1	1¼	1½	2	2½	3	4	6	8	10	12 — MWP (ASME Class / DIN PN)
Trunnion Mounted Ball	Top Entry	C52	✓	Full	Welded			300				300								
	3 Piece	C91	✓	Standard	Welded								150							
		C92	✓	Standard	Welded								300							
		C93	✓	Standard	Welded								600							
		C94	✓	Standard	Welded								900							
		C95	✓	Standard	Welded								1500							
		C96	✓	Standard	Welded								2500							
	2 Piece	C81	✓	Full	Welded								150							
		C82	✓	Full	Welded								300							
		C83	✓	Full	Welded								600							
Floating Ball	3 Piece	C47	✓	Standard	Welded										600			300		
		C47-BD	✓	Standard	Welded										300					
		C26	✓	Full	Welded													600		
		C28	✓	Standard	Welded										2500					
	Diverter 3 Piece	DC47	✓	Standard	Welded															
	Multiport 3 Piece	C61	✓	Standard	Welded										600			300		
	Multiport 3 Piece	C62	✓	Standard	Welded										600			300		
	2 Piece	C31	✓	Standard	Threaded															
		C32	✓	Standard	Threaded															
		C73	✓	Full	Threaded															
		C74	✓	Full	Threaded															
		C77	✓	Full	Threaded															
		C78	✓	Full	Threaded															

ASME Class	150				300		600	900	1500		2500		6000	
Pressure Bar	-1	0	16	20	40	50	100	150	200	250	350	420	700	1000
Pressure psi	-14	0	230	290	580	750	1500	2250	3000	3750	5000	6000	10000	15000

CRYOGENIC VALVES

One-Way Assembly

An integral rib is machined at one of the stem flats to match a groove in the ball that faces the relief hole. A "T" mark on the stem tip shows the relief hole direction. These two features ensure a one-way assembly for safe operation and maintenance.

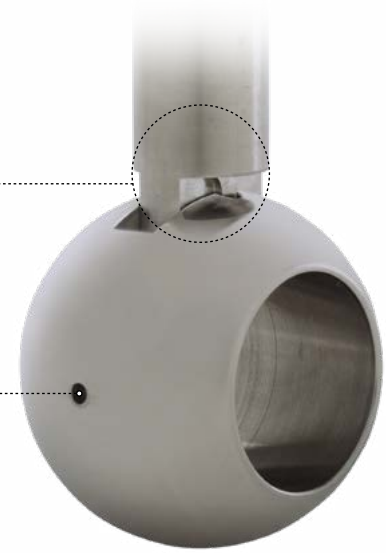

No-Trap Cavity

Each cryogenic valve is equipped with a mechanism that prevents pressure buildup in the valve cavity, eliminating the risk that liquefied-gas evaporation will over - pressure the valve body by releasing over-pressured media from the cavity area back to the line.

Habonim uses a variety of such mechanisms:

- Relief hole on the upstream sphere of the ball to prevent pressure buildup in the cavity
- Spring loaded seat construction with piston effect for cavity pressure relief
- Single seat active seal construction - no closed cavity

"T" mark on stem showing the relief hole direction

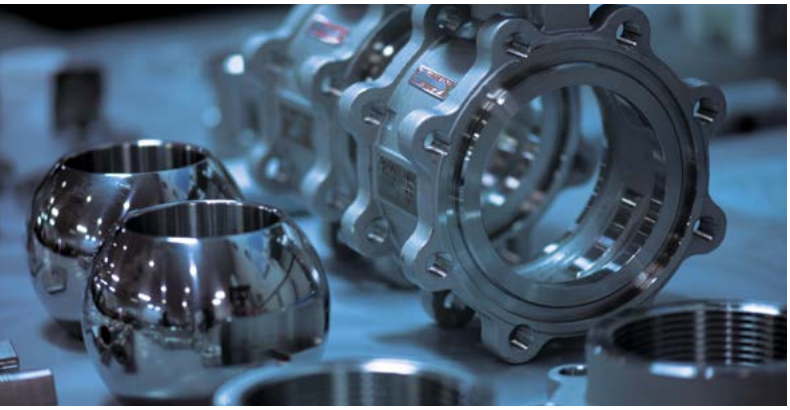

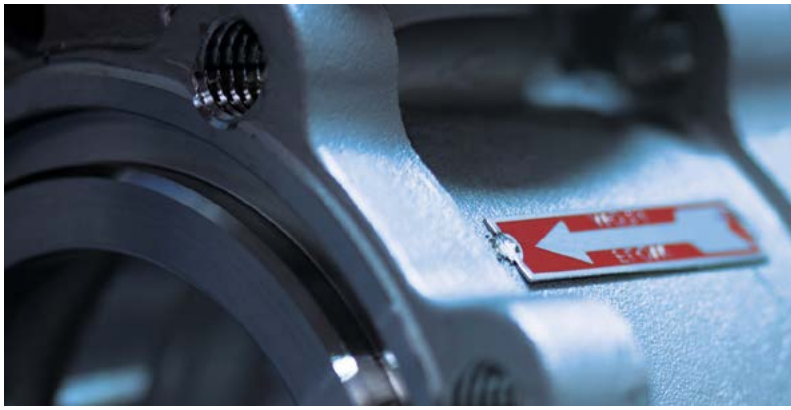

Minimal Thermal Expansion

Using one-size-up and double the amount of body bolts reduces linear thermal expansion and dramatically decreases the likelihood of leakage to the atmosphere.

Indicator on the extended bonnet top

Efficient Heat Transfer

The Habonim standard bonnet length design complies with BS6364 for non-cold-box applications. The long neck bonnet insulates the stem seal from the low temperatures of cryogenic fluids, thus enabling safe and long lasting seal service. A small gap between the bonnet ID and the stem OD, ensurs a thick layer between the media and the stem seal.

Inclination Limitation

The Habonim bonnet design comes in two optional versions. Both are designed to prevent cryogenic liquids from reaching the stem seal. Habonim recommends installation in the vertical position, but allows installation at an angle. The 12" bonnet can be installed up to 45° from the vertical axis to maintain fully BS6364 compliant. The 6" bonnet can be installed up to 15° from the vertical axis.

Indicator on valve body

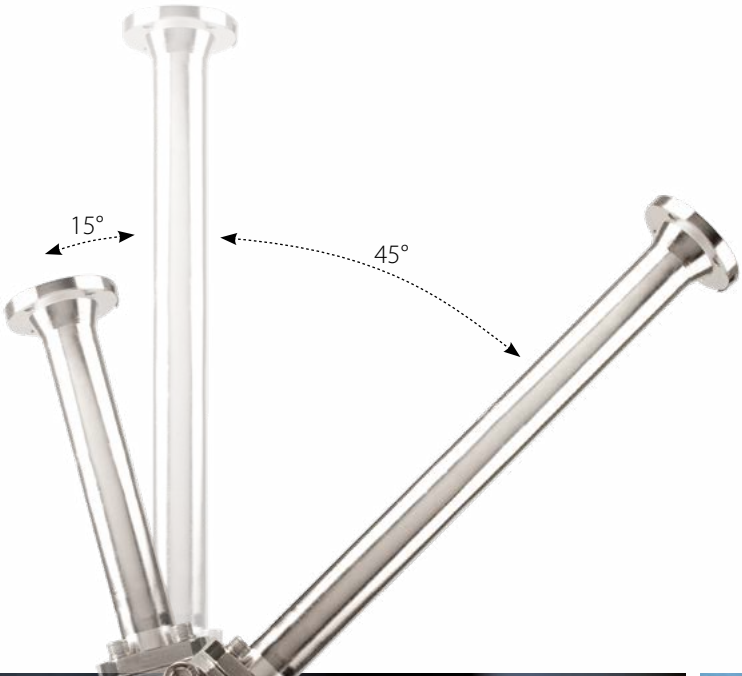

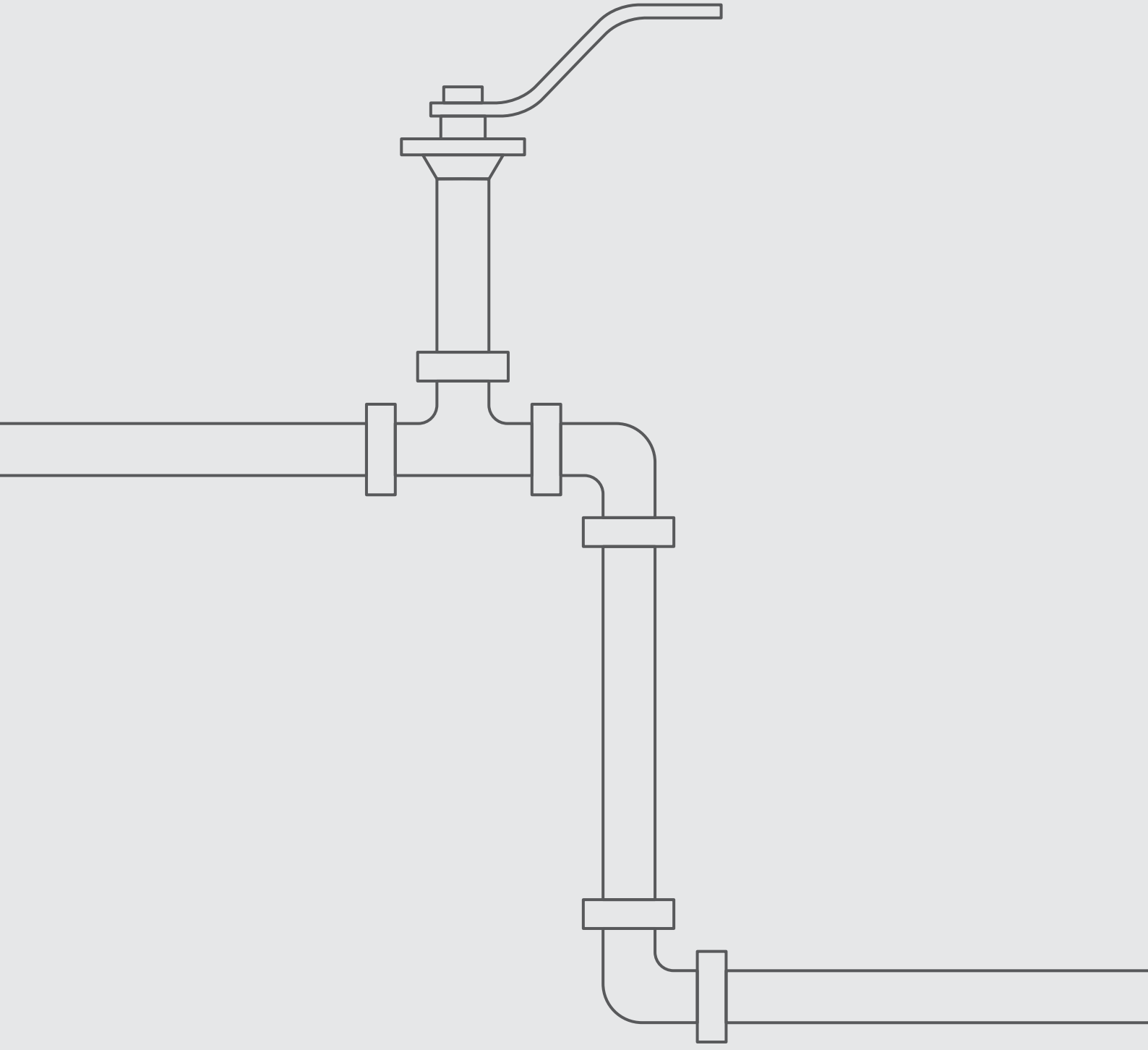

C52

Cryogenic Valves

TRUNNION

TOP ENTRY

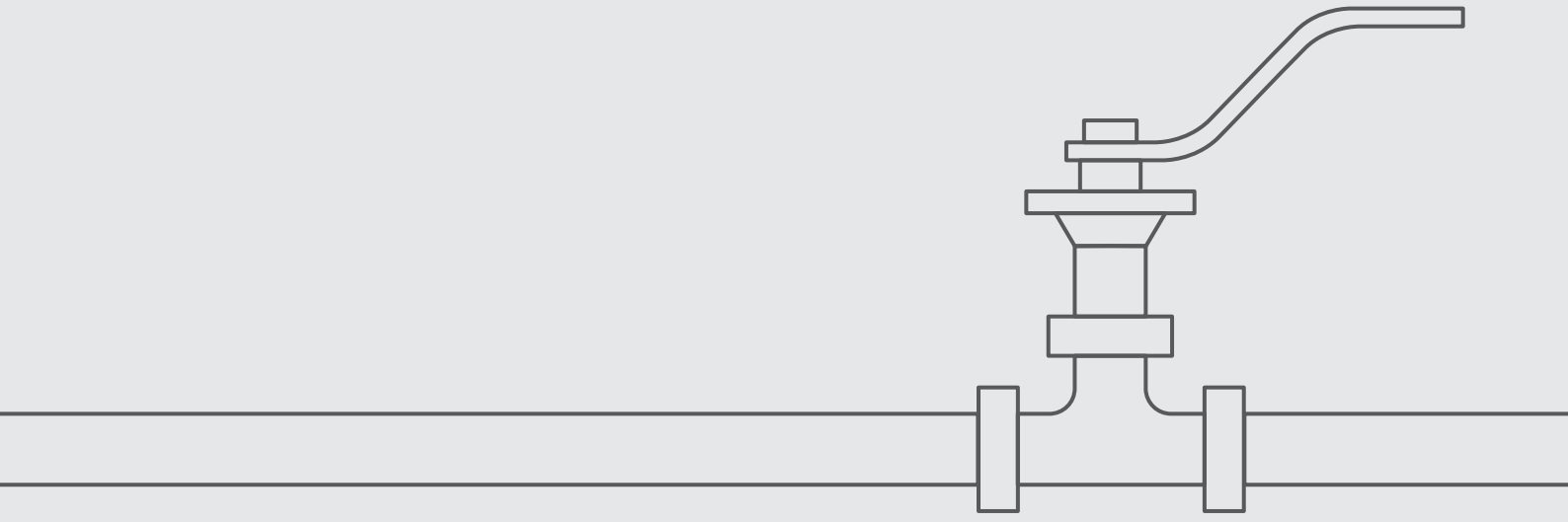

Cryogenic Top Entry Trunnion Mounted Ball Valve

PATENT PENDING

Valve dimensions

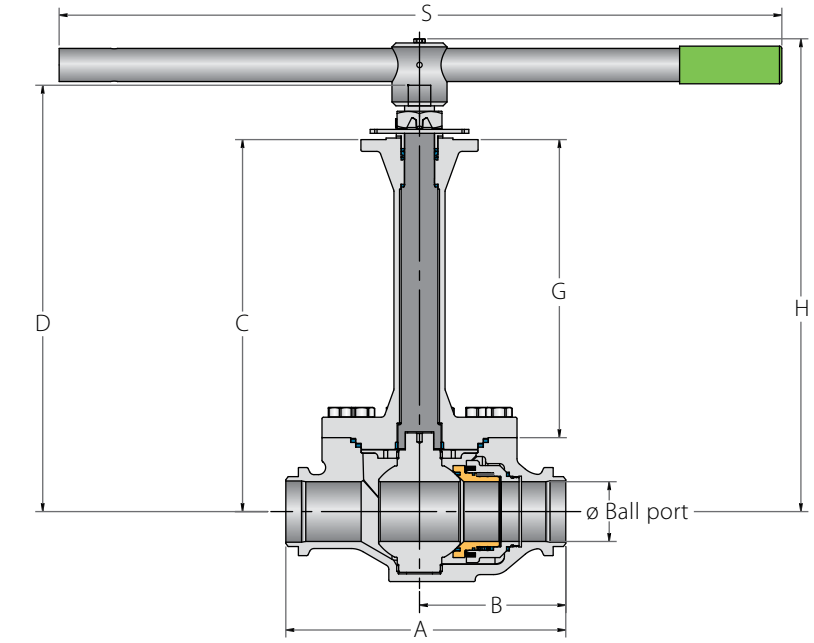

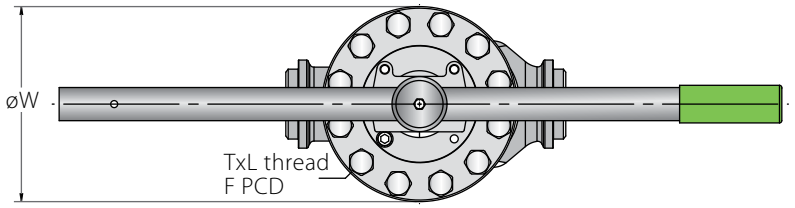

Handle type for sizes ½" - 1"

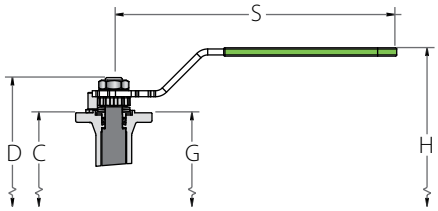

Standard stem tops

DD Type
for sizes ½" - 1½"

Stem flats
show valve
ball position

Square Type
for sizes 2" - 6"

Stem groove
shows valve
ball position

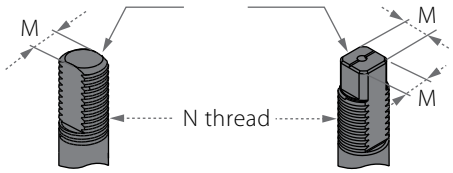

Preparation for actuation

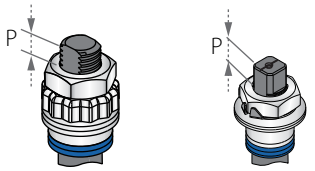

½" - 1"
with nut

1½" - 6"

Full Port	Units	Ball port	A	B	C	D	G	H	S (1)	W	M	N	P	F		TxL	Weight kg/lb	Kv/Cv
DN15	mm	14	165	88	340	357.4	301	383.2	187	105	7.5	7/16"-20 UNF	6.4	F04	42	M5x7	5.3	20
½"	inch	0.55	6.5	3.46	13.39	147	11.85	159	7.36	4.13	0.30		0.25		1.65		11.68	23
DN20	mm	20	190	100	353	382.5	309	407.5	237	121	8.7	9/16"-18 UNF	8.5	F05	50	M6x8	7.5	31
¾"	inch	0.79	7.48	3.94	13.9	156	12.17	164	9.33	4.76	0.34		0.33		1.97		16.53	36
DN25	mm	25.4	216	113	358	387.5	309	412.5	237	131	8.7	9/16"-18 UNF	8.5	F05	50	M6x8	9	61
1"	inch	1	8.5	4.45	149	15.26	12.17	16.24	9.33	5.16	0.34		0.33		1.97		19.84	70
DN40	mm	38.2	241	129	389	430.6	330.4	456.6	401	173	13.9	M20x2.5	15.2	F07	70	M8x9	17	164
1½"	inch	1.5	9.49	58	15.31	16.95	131	17.98	15.79	6.81	0.55		0.6		2.76		37.48	190
DN50	mm	50.8	292	151	428	474.5	353	514	610	198	18.9	1"-14 UNS	16.6	F10	102	M10x15	32	327
2"	inch	2	11.5	5.94	16.85	18.68	13.9	20.24	242	7.80	0.74		0.65		42		70.55	378
DN65	mm	65	330	166	454.4	523.5	373.4	582.6	916	207	28.45	1½"-12 UNF	26.2	F12	125	M12x15	48	668
2½"	inch	2.56	12.99	6.54	17.89	20.61	14.7	22.94	366	8.15	1.12		13		4.92		105.82	772
DN80	mm	76	356	186	473	542.1	379	601.2	916	248	28.45	1½"-12 UNF	26.2	F12	125	M12x15	58	823
3"	inch	2.99	142	7.32	18.62	21.34	14.92	23.67	366	9.76	1.12		13		4.92		127.87	951
DN100	mm	100	432	224	490.4	559.5	378.4	619.3	916	305	28.45	1½"-12 UNF	26.2	F12	125	M12x15	85	1678
4"	inch	3.94	171	8.82	19.31	223	14.9	24.38	366	121	1.12		13		4.92		187.39	1940
DN150	mm	150	559	285	553	665.7	404	729.7	916	392	35.9	2"-8 UN	40	F16	165	M20x30	177	4199
6"	inch	5.91	221	11.22	21.77	26.21	15.91	28.73	366	15.43	1.41		1.57		6.5		390.22	4854

(1) Manual gear or actuation recommended, when the operation force on the handle overcomes 360N

Cryogenic Top Entry Trunnion Mounted Ball Valve

Components & materials

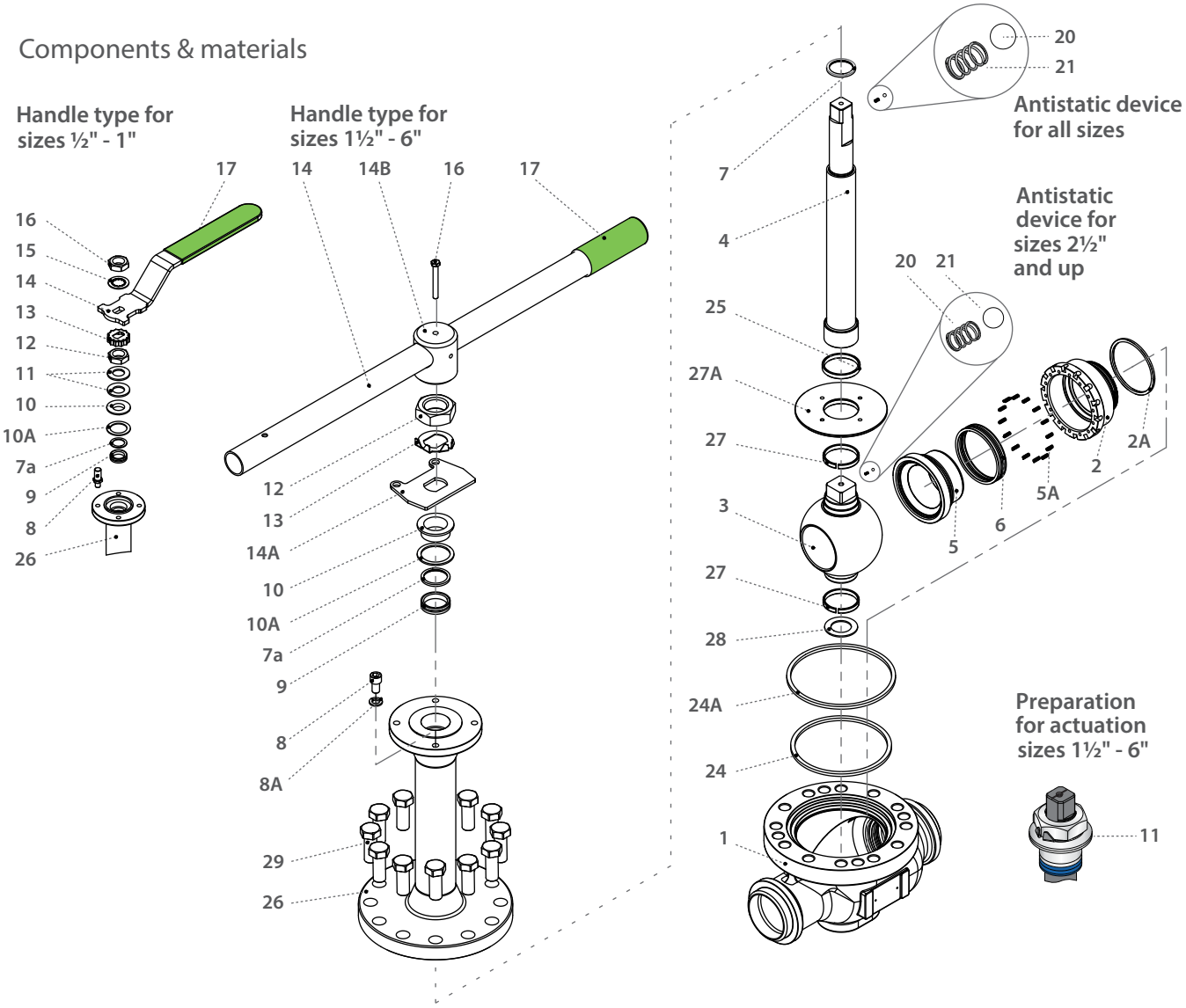

Item	Description	Material specifications	Qty.
1	Body	Acc. Ordering Code	1
2*	Seat Housing	S. Steel	1
2A*	Housing Seal	Acc. Ordering Code	1
3	Ball	Acc. Ordering Code	1
4	Stem	Acc. Ordering Code	1
5*	Hybrid seat	A479 316/316L + TFM, CF PTFE, PCTFE	1
5A*	Seat spring	Inconel X750	6-18
6*	Lip seal	V-PTFE + UNS R30003	2
7*	Stem thrust seal	PCTFE, TFM	1
7a*	Anti-abrasion ring	PCTFE, TFM	1
8	Stop screw	EN 3506-1 A4-80	1
8A	Spring washer	S. Steel	1
9*	Stem seal	TFM	1
10	Follower	S. Steel	1
10A*	Slide bearing	S. Steel	1
11	Disc spring	S. Steel	2
12	Stem nut	S. Steel	1
13	Locking clip (Tab lock washer for 1.5" and up)	S. Steel	1

Item	Description	Material specifications	Qty.
14**	Handle	S. Steel	1
14A	Stop plate	S. Steel	1
14B	Wrench head	S. Steel	1
15	Serrated washer	S. Steel	1
16	Handle nut (Wrench bolt for 1.5" and up)	S. Steel	1
17	Sleeve	PVC	1
20	Anti-static spring	S. Steel	1-2
21	Anti-static plunger	S. Steel	1-2
23	Tag (not shown)	S. Steel	1
24*	Bonnet primary seal	TFM	1
24A*	Bonnet secondary seal	Graphite	1
25*	Stem bearing	TFM	1
26	Bonnet	S. Steel	1
27*	Ball radial bearing	316L + PTFE	2
27A	Centering plate	A479 316/316L	1
28*	Lower thrust washer	DIN 127 A2	1
29	Bonnet bolt	A193 B8M, DIN 3506 A2-70	12

* Repair kit components

** Manual gear or actuation recommended, when the operation force on the handle overcomes 360N

Cryogenic Top Entry Trunnion Mounted Ball Valve

PATENT PENDING

Valve dimensions

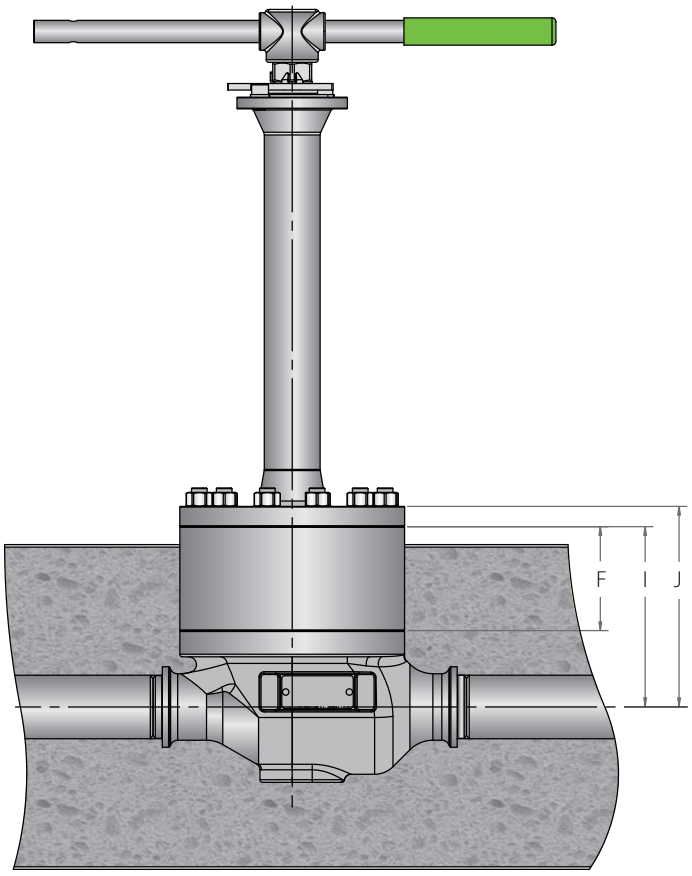

Extended hub

- Extended hub for insulated lines
- Extends valve cover over the insulation boundary
- Allows inner parts access and maintenance without dismantling the insulation
- Fits different insulation types and sizes used on the market
- The extended hub is an "add-on" kit to the standard valve.

Size	Unit	Extended Hub			Semi-Extended Hub		
		F(1)	I(2)	J(3)	F(1)	I(2)	J(3)
DN15	mm	-	-	-	25	64	74
½"	inch	-	-	-	0.98	2.52	2.91
DN20	mm	-	-	-	35	79	92
¾"	inch	-	-	-	1.38	3.11	3.62
DN25	mm	-	-	-	45	94	107
1"	inch	-	-	-	1.77	3.7	4.21
DN40	mm	80	139.6	154.6	50	109.6	124.6
1½"	inch	3.15	5.5	69	1.97	4.31	4.91
DN50	mm	85	160	181	50	125	146
2"	inch	3.35	6.3	7.13	1.97	4.92	5.75
DN65	mm	95	176	197	60	141	162
2½"	inch	3.74	6.93	7.76	2.36	5.55	6.38
DN80	mm	95	189	215	-	-	-
3"	inch	3.74	7.44	8.46	-	-	-
DN100	mm	100	212	240	-	-	-
4"	inch	3.94	8.35	9.45	-	-	-
DN150	mm	100	249	284	-	-	-
6"	inch	3.94	9.8	11.18	-	-	-

Components & materials

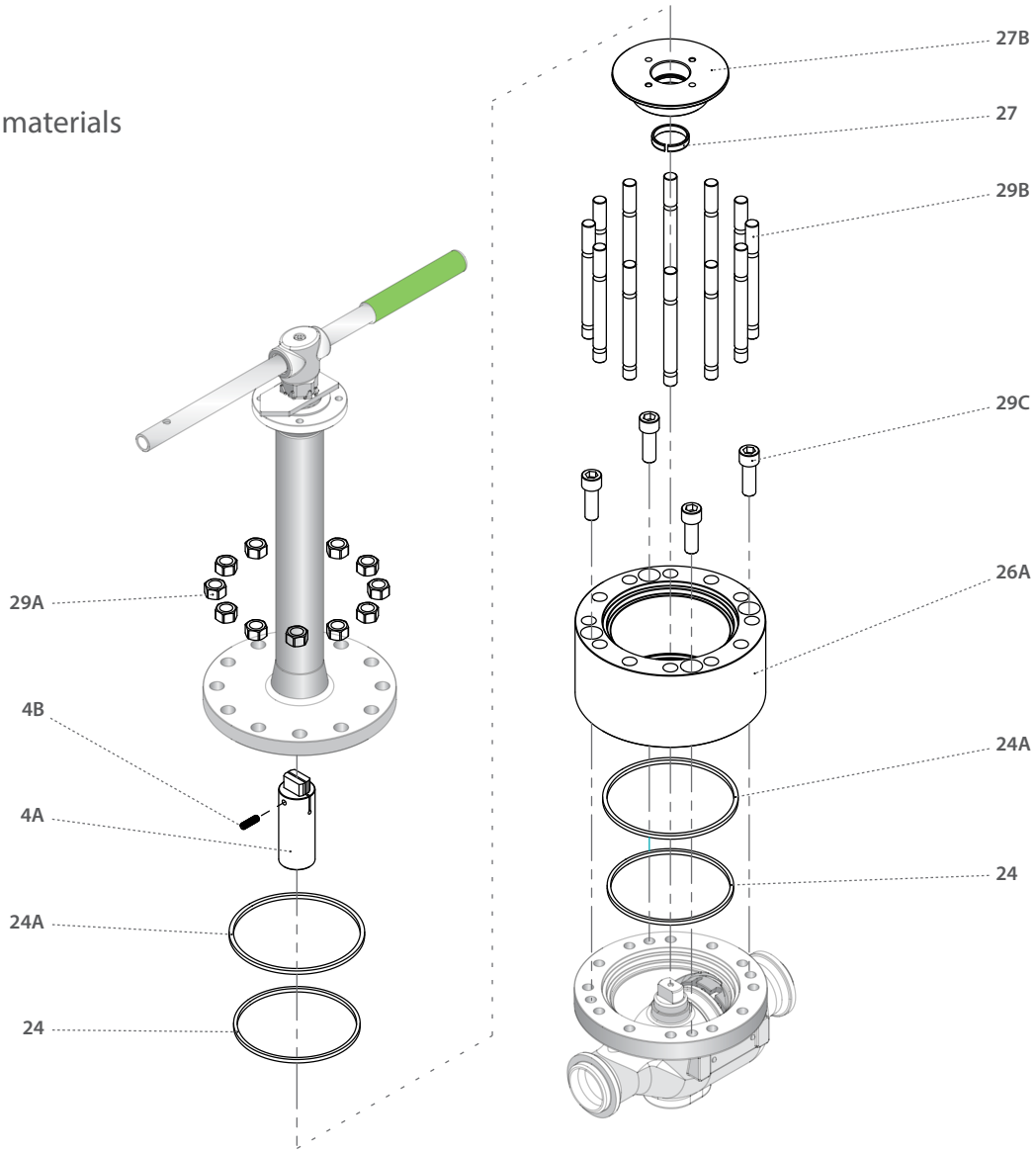

Item	Description	Material specifications	Qty.
4A	Stem extension (or one piece extended stem - optional)	High Strength S. Steel	1
4B	Clamp screw	S. Steel	1
24*	Bonnet primary seal	TFM	2
24A*	Bonnet secondary seal	Graphite	2
26A	Hub	A479 316/316L/CF8M	1
27*	Ball radial bearing	316L + PTFE	1
27B	Centering plate for extended hub	A479 316/316L	1
29A	Bonnet nut	S. Steel	12
29B	Bonnet stud	S. Steel	12
29C	Hub bolt	S. Steel	2-4

* Repair kit components

C52

Cryogenic Top Entry Trunnion Mounted Ball Valve - Ordering Code System

"Mandatory option" options are marked with green background | "Standard offer" options are marked with light green background

1	2	3	4	5	6	7	8	9	10	11	12	13	14	15	16	17	18	19	20	21	22	23	24	.	.	30
1	5		F	C	B	5	2	W	-	6	M	6	D	P	A	G	/	X	B	W						
Size		Features				Series		Design		Body/ Bonnet	Stem	Ball & seat ring	Seat feature	Seat insert	Primary bonnet seal	Seat housing seal		End conection				Special features				

Size (1-2)		
Code	inch	mm
05	½"	15
07	¾"	20
10	1"	25
12	1¼"	32
15	1½"	40
20	2"	50
25	2½"	65
30	3"	80
40	4"	100
60	6"	150

Features (3-6)	
F	Fire safe
C	Cryogenic design
B	Full port

Series (7-8)	
52	ASME #300 Top Entry

Design (9)	
W	Total HermetiX Integrity package

Body & Bonnet (11)	
6	S. Steel

Stem material (12)	
M	High Strength S. Steel
Z	Inconel

Ball & seat ring material (13)	
6	S. Steel

Seat feature (14)	
D	Double Piston Effect (DPE)

Seat insert (15)	
P	CF PTFE
A	TFM
C	PCTFE

Primary bonnet seal* (16)	
A	TFM

* Graphite seal used as a secondary bonnet seal for a fire safe valve and TFM for non-fire safe

Seat Housing Seal (17)	
G	Graphite
M	PTFE coated SS

End Connection (19-22)	
Welded ends	
XBW	Extended buttweld sch 40
XBW10	Extended buttweld sch 10
XBW80	Extended buttweld sch 80
ETI-S	Extended Butt weld ISO 1127, S=wall thickness in mm

Special Features (24-30)	
EXH	Extended Hub
EXS	Semi-Extended Hub

C91 C92 C93 C94 C95 C96

Cryogenic Valves

TRUNNION

3 PIECES

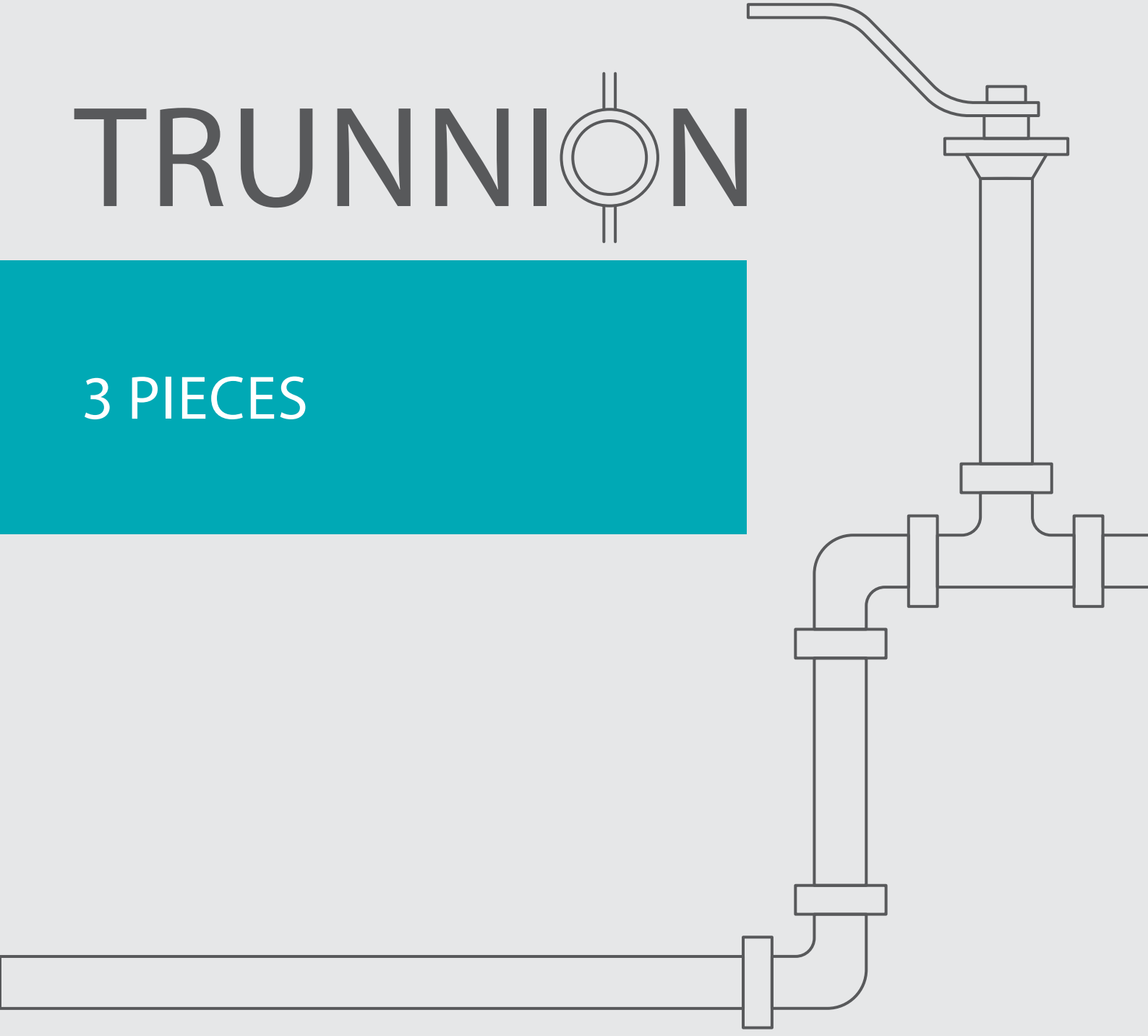

C91 C92 2"-6" | DN50-DN150 | CLASS 150/300

Cryogenic Trunnion Mounted Ball 3 Piece

Valve dimensions

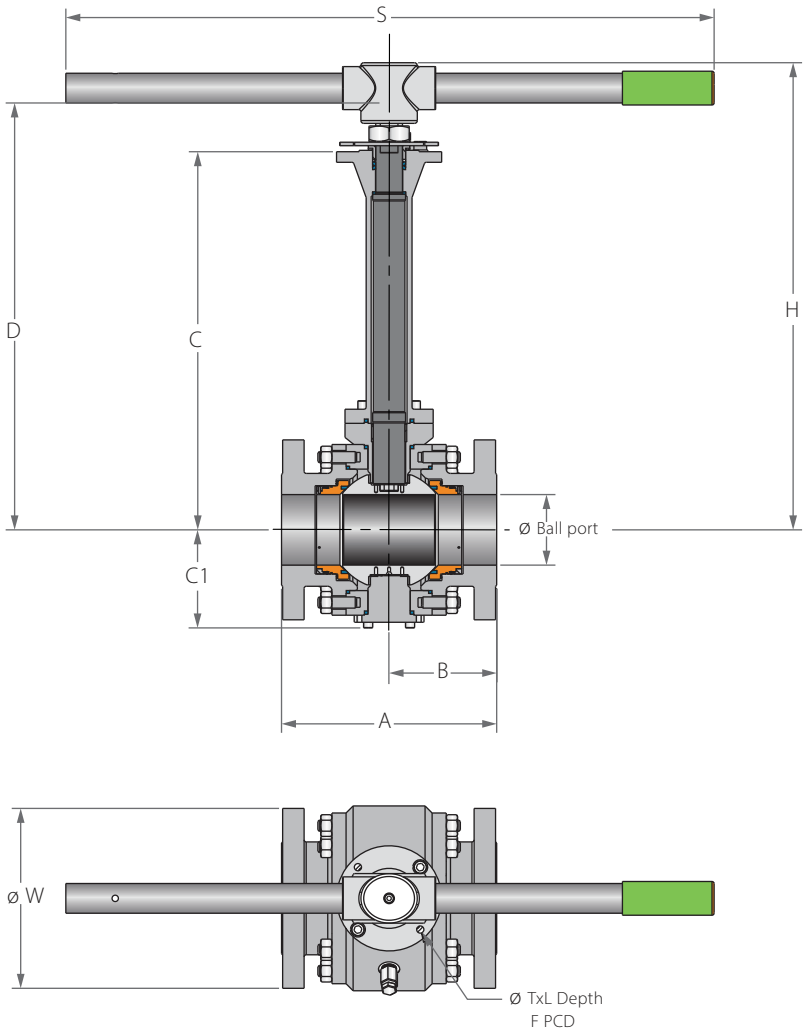

Preparation for actuation

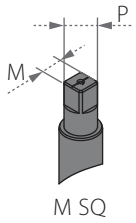

Std. port	Unit	Ball port	A		B		C	C1	D	W		M SQ	P SQ	H	S	F		TxL	Weight kg/ib		Kv / Cv	
			150	300	150	300				150	300								150	300	150	300
DN50	mm	49	178	216	89	108	500	94	546.5	150	165	18.9	22.7	525.8	401	(F10)	102	M10X15 (4 holes)	27	31	400	363
2"	inch	1.93	7.01	8.50	3.50	4.25	19.69	3.7	21.52	5.91	6.5	0.74	0.89	20.7	15.79		4.02		60	68	463	420
DN80	mm	74	203	283	101	141.5	550	117	619.1	190	210	28.45	35.2	638.6	610	(F12)	125	M12X15 (4 holes)	44	61	1125	952
3"	inch	2.91	7.99	11.14	4	5.57	21.65	4.61	24.37	7.48	8.27	1.12	1.39	25.14	24.02		4.92		97	134	1300	1100
DN100	mm	100	229	305	114.0	152.5	600	139	669.1	230	255	28.45	35.2	662.6	916	(F12)	125	M12X15 (4 holes)	66	100	2154	1860
4"	inch	3.94	9.02	12	4.51	6	236.22	5.47	26.34	9.06	10.04	1.12	1.39	26.09	36.06		4.92		146	220	2490	2150
DN150	mm	150	394	403	197	201.5	607	191	719.6	280	320	35.9	43.5	777.1	916	(F14)	140	M16X20 (4 holes)	180	216	4723	4628
6"	inch	5.91	15.51	15.87	7.76	7.93	23.9	7.52	28.33	11.02	12.6	1.41	1.71	30.59	36.06		5.51		397	476	5460	5350

Cryogenic Trunnion Mounted Ball 3 Piece

Valve dimensions

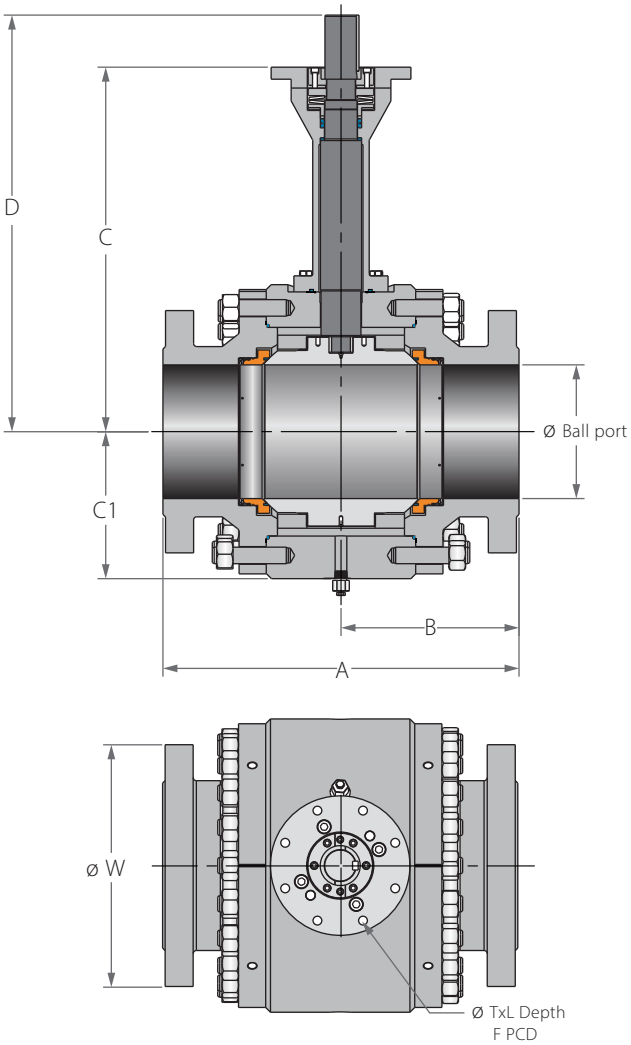

Preparation for actuation

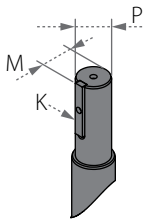

Std. port	Unit	Ball port	A		B		C	C1	D	W		P	M	K	F		TxL	Weight kg/ib		Kv / Cv	
			150	300	150	300				150	300							150	300	150	300
DN200	mm	201.00	457.00	502.00	228.50	251.00	708.00	215.00	785.00	345.00	380.00	50.00	54.00	14.00	(F16)	165.00	22x25 (4 holes)	346	378	9273	8737
8"	inch	7.91	17.99	19.76	9.00	9.88	27.87	8.46	30.91	13.58	14.96	1.97	2.13	0.55		6.50		763	833	10720	10100
DN250	mm	252.00	533.00	568.00	266.50	284.00	713.30	260.00	790.40	405.00	445.00	50.00	54.00	14.00	(F25)	254.00	18x25 (8 holes)	518	639	15224	14792
10"	inch	9.92	20.98	22.36	10.49	11.18	28.08	10.24	31.12	15.94	17.52	1.97	2.13	0.55		10.00		1142	1409	17600	17100
DN300	mm	303.00	610.00	648.00	305.00	324.00	800.00	300.00	880.50	485.00	520.00	60.00	63.50	18.00	(F25)	254.00	18x25 (8 holes)	723	833	23096	22404
12"	inch	11.93	24.02	25.51	12.01	12.76	31.50	11.81	34.67	19.09	20.47	2.36	2.50	0.71		10.00		1594	1836	26700	25900

C93 C94 2"-6" | DN50-DN150 | CLASS 600/900

Cryogenic Trunnion Mounted Ball 3 Piece

Valve dimensions

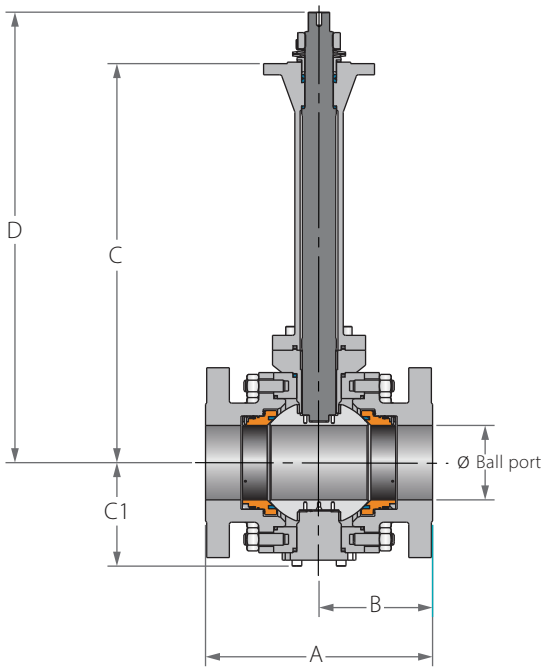

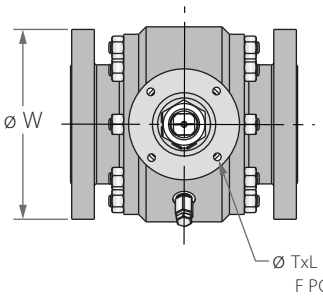

Preparation for actuation

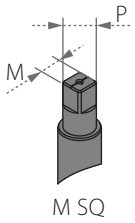

Std. port	Unit	Ball port	A		B		C		C1		D		W		M SQ	P SQ	F		TxL	Weight kg/ib		Kv / Cv	
			600	900	600	900	600	900	600	900	600	900	150	300						150	300	150	300
DN50	mm	49	292	368	146	184	500	459.5	119	263	547.5	507	165	215	18.9	22.7	(F10)	102	M10X15 (4 holes)	49	67	329	294
2"	inch	1.93	11.5	14.49	5.75	7.24	19.69	18.09	4.69	10.35	21.56	19.96	6.5	8.46	0.74	0.89		4.02		108	148	380	340
DN80	mm	74	356	381	178	190.5	550	502	160	152.7	617	569	210	240	28.45	35.2	(F12)	125	M12X15 (4 holes)	103	114	874	822
3"	inch	2.91	14.02	15	7.01	7.5	21.65	19.76	6.3	6.01	24.29	22.4	8.27	9.45	1.12	1.39		4.92		227	251	1010	950
DN100	mm	100	432	457	216	228.5	600	193	184	184	712.6	259	275	290	35.9	43.5	(F14)	140	M16X20 (4 holes)	166	186	1557	1471
4"	inch	3.94	17.01	17.99	8.5	9	23.62	7.6	7.24	7.24	28.06	10.2	10.83	11.42	1.41	1.71		5.51		366	410	1800	1700
DN150	mm	150	559	610	279.5	305	624.5	642.5	214.5	224	737.1	755.1	355	380	35.9	43.5	(F14)	140	M16X20 (4 holes)	342	418	3893	3823
6"	inch	5.91	22.01	24.02	11	12.01	24.59	25.3	8.44	8.82	29.02	29.73	13.98	14.96	1.41	1.71		5.51		754	922	4500	4420

Cryogenic Trunnion Mounted Ball 3 Piece

Valve dimensions

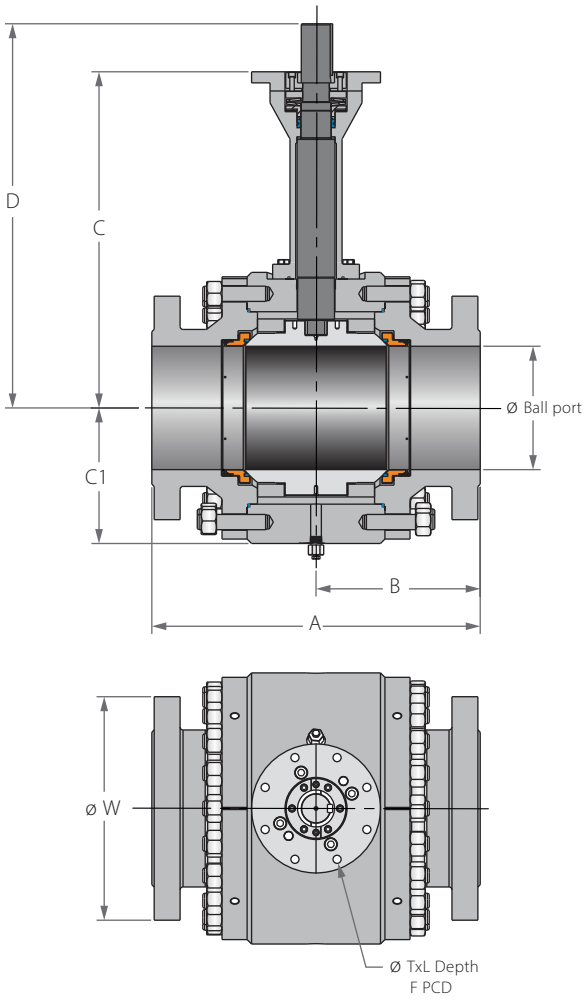

Preparation for actuation

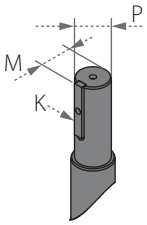

Std. port	Unit	Ball port	A		B		C		C1		D		W		P	M	K	F		TxL	Weight kg/ib		Kv / Cv	
			600	900	600	900	600	900	600	900	600	900	600	900							600	900	600	900
DN250	mm	201.00	660.00	737.00	330.00	368.50	696.00	696.00	263.00	263.00	774.00	774.00	420.00	470.00	60.00	63.50	14.00	(F25)	254.00	18x25 (8 holes)	577	836	7742	7344
8"	inch	7.91	25.98	29.02	12.99	14.51	27.40	27.40	10.35	10.35	30.47	30.47	16.54	18.50	2.36	2.50	0.55		10.00		1272	1843	8950	8490
DN100	mm	252.00	787.00	838.00	393.50	419.00	739.00	757.00	310.00	326.00	817.00	835.00	510.00	545.00	60.00	63.50	14.00	(F25)	254.00	18x35 (8 holes)	931	1301	12543	12110
10"	inch	9.92	30.98	32.99	15.49	16.50	29.09	29.80	12.20	12.83	32.17	32.87	20.08	21.46	2.36	2.50	0.55		10.00		2052	2868	14500	14000
DN300	mm	303.00	838.00	965.00	419.00	482.50	800.00	788.00	344.00	361.00	915.00	903.00	560.00	610.00	72.00	76.50	20.00	(F25)	254.00	18x35 (8 holes)	1126	1576	19809	18598
12"	inch	11.93	32.99	37.99	16.50	19.00	31.50	31.02	13.54	14.21	36.02	35.55	22.05	24.02	2.83	3.01	0.79		10.00		2482	3474	22900	21500

C95 C96 2"-6" | DN50-DN150 | CLASS 1500/2500

Cryogenic High Pressure Trunnion Mounted Ball 3 Piece

Valve dimensions

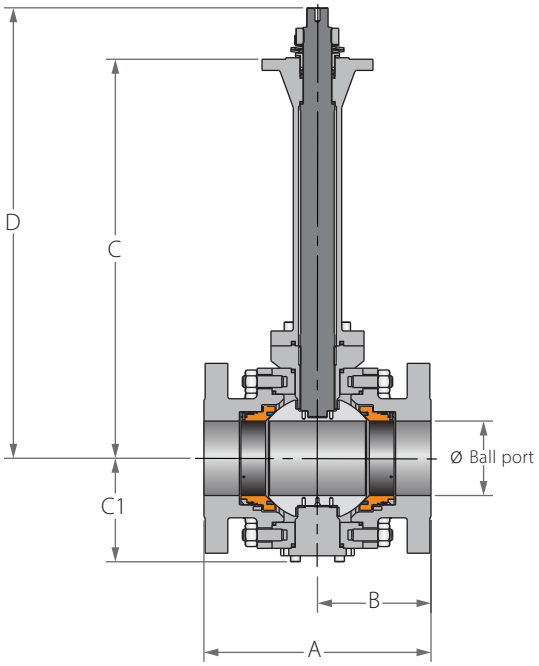

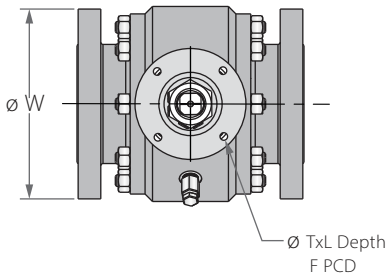

Preparation for actuation

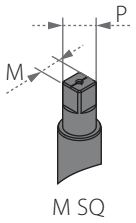

Std. port	Unit	Ball port		A		B		C	C1	D	W		M SQ	P SQ	F		TxL	Weight kg/ib		Kv / Cv	
		1500	2500	150	300	150	300				150	300						150	300	150	300
DN50	mm	49	42	368	451	184	225.5	500	127	569	215	235	28.45	35	(F12)	125	M12X15 (4 holes)	90	179	281	260
2"	inch	1.93	1.65	14.49	17.76	7.24	8.88	19.69	5	22.4	8.46	9.25	1.12	1.38		4.92		198	395	325	300
DN80	mm	74	62	470	578	235	289	550	201.5	619	265	305	28.45	35	(F12)	125	M12X15 (4 holes)	175	340	735	649
3"	inch	2.91	2.44	18.5	22.76	9.25	11.38	21.65	7.93	24.37	10.43	12.01	1.12	1.38		4.92		386	750	850	750
DN100	mm	100	87	546	673	273	336.5	600	198.5	712	310	355	35.9	43.5	(F14)	140	M16X20 (4 holes)	330	646	1384	1228
4"	inch	3.94	3.43	21.5	26.5	10.75	13.25	23.62	7.81	28.03	12.2	13.98	1.41	1.71		5.51		728	1424	1600	1420
DN150	mm	144	131	705	914	352.5	457	608	272	763	395	485	45.9	59	(F16)	165	M20x30 (4 holes)	627	1227	3590	2206
6"	inch	5.67	5.16	27.76	35.98	13.88	17.99	23.94	10.71	30.04	15.55	19.09	1.81	2.32		6.5		1382	2705	4150	2550

Cryogenic High Pressure Trunnion Mounted Ball 3 Piece

Valve dimensions

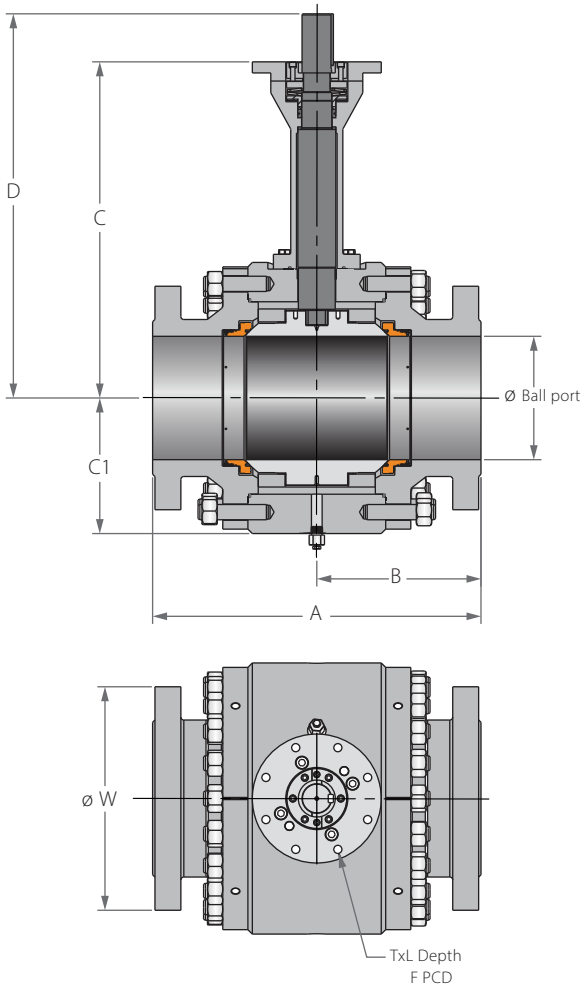

Preparation for actuation

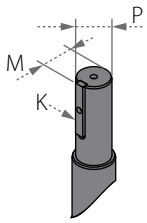

Std. port	Unit	Ball port		A		B		C	C1	D	W		P	M	K	F		TxL	Weight kg/ib		Kv / Cv	
		1500	2500	150	300	150	300				1500	2500							1500	2500	1500	2500
DN200	mm	201.00	179.00	832.00	1022.00	416.00	511.00	705.00	273.00	780.00	485.00	550.00	72.00	76.90	20.00	(F25)	254.00	18x25 (8 holes)	1000	2330	6963	4758
8"	inch	7.91	7.05	32.76	40.24	16.38	20.12	27.76	10.75	30.71	19.09	21.65	2.83	3.03	0.79		10.00		2205	5137	8050	5500
DN250	mm	239.00	223.00	991.00	1270.00	495.50	635.00	742.00	374.00	846.00	585.00	675.00	120.00	104.40	28.00	(F35)	356.00	32x45 (8 holes)	1900	3623	11418	7389
10"	inch	9.41	8.78	39.02	50.00	19.51	25.00	29.21	14.72	33.31	23.03	26.57	4.72	4.11	1.10		14.01		4189	7987	13200	8542
DN300	mm	287.00	265.00	1130.00	1422.00	565.00	711.00	800.00	512.00	930.00	675.00	760.00	98.00	104.40	28.00	(F40)	406.00	38x55 (8 holes)	2705	4875	16868	10508
12"	inch	11.30	10.43	44.49	55.98	22.24	27.99	31.50	20.16	36.61	26.57	29.92	3.86	4.11	1.10		15.98		5963	10747	19500	12148

C91 C92 C93 C94 C95 C96 2"-6"

Cryogenic Trunnion Mounted Ball 3 Piece

Components & materials

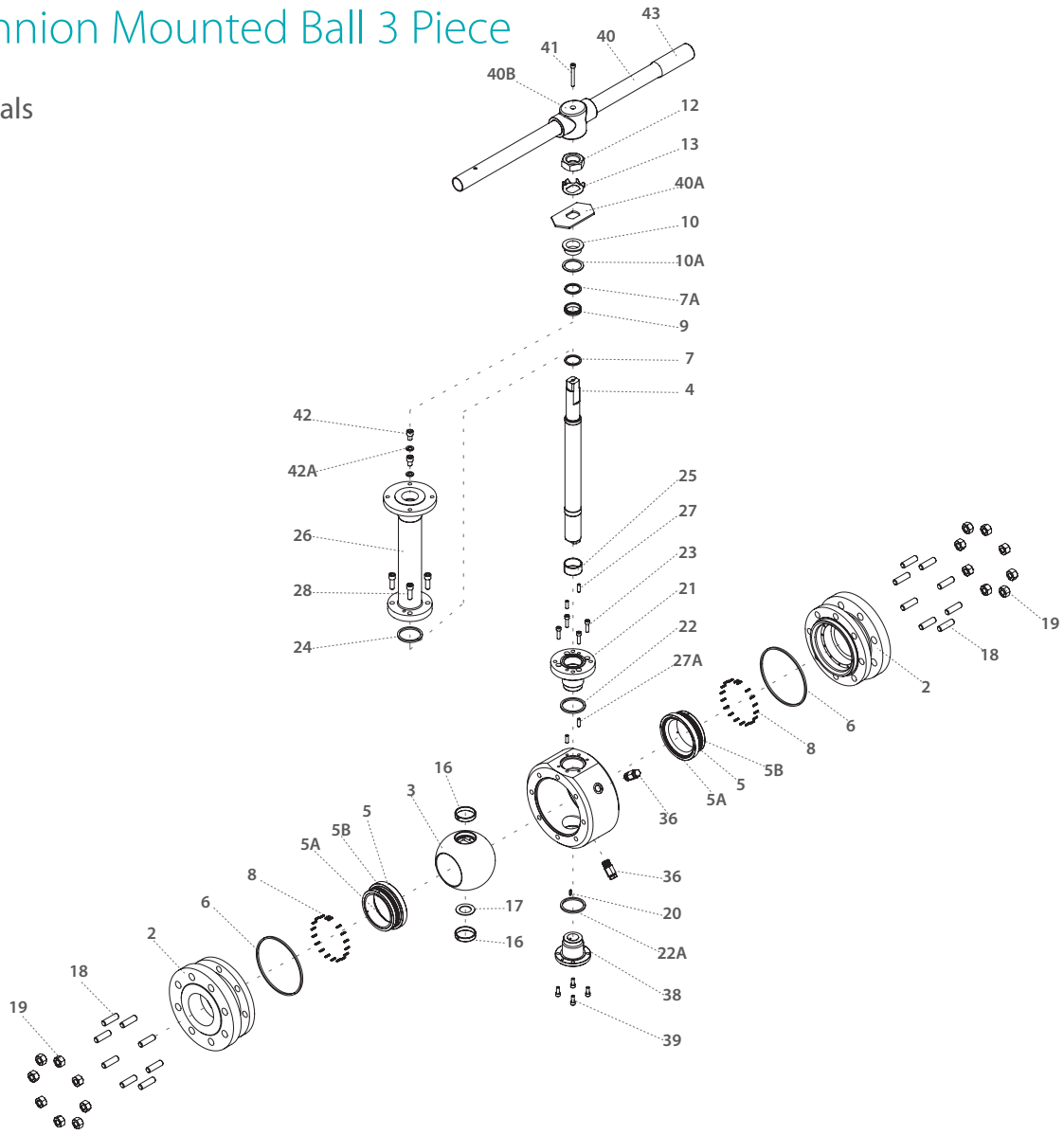

Item	Description	Material Spec. ASTM	Qty.
1	Body	Acc. Ordering Code	1
2	End	Acc. Ordering Code	2
3	Ball	Acc. Ordering Code	1
4	Stem	Acc. Ordering Code	1
5*	Seat	Acc. Ordering Code	2
5A*	Seat insert	Acc. Ordering Code	2
5B*	Seat seal	PTFE+Elgiloy, Graphite	2
6*	Body seal	Graphite	2
7*	Stem thrust seal	PCTFE	1
7A*	Anti-abrasion ring	PCTFE	1
8	Seat spring	Inconel 750	20-32
9*	Stem seal	HermetiX TFM	1
10	Follower	S. Steel	1
10A*	Slide bearing	S. Steel	1
12	Stem nut	S. Steel	1
13	Tab lock washer	S. Steel	1
16	Ball Bearing	PMT 316	2
17	Ball Thrust Washer	PMT 316	2
18	Body Stud	ASTM A320-B8M	8-40
19	Body Nut	A194 8M	8-40
20	Anti-static spring	S. Steel	1

Item	Description	Material Spec. ASTM	Qty.
21(1)	Gland Plate	A479 316/ 316L	1
22(1)*	Gland Plate Seal	Graphite	1
22A*	Outer trunnion seal	Graphite	1
23(1)	Gland Plate Bolts	ASTM A320-B8M	6-8
24*	Bonnet seal	Graphite	1
25	Stem bearing	PMT 316	1
26	Bonnet	S. Steel	1
27	Bonnet Pins	S. Steel	2
27A(1)	Gland Pins	S. Steel	2
28	Bonnet Bolts	ASTM A320-B8M	4-8
36	Plug drain/ vent valve	S. Steel	2
37	Tag (not shown)	S.Steel	1
38	Outer trunnion	A479 316	1
39	Outer trunnion bolts	ASTM A320-B8M	4-8
40	Pipe handle	S. Steel	1
40A	Stop plate	S. Steel	1
40B	Wrench head	S. Steel	1
41	Wrench head bolt	S. Steel	1
42	Stop bolt	S. Steel	2
42A	Spring washer	S. Steel	2
43	Sleeve	PCV	1

Cryogenic Trunnion Mounted Ball 3 Piece

Components & materials

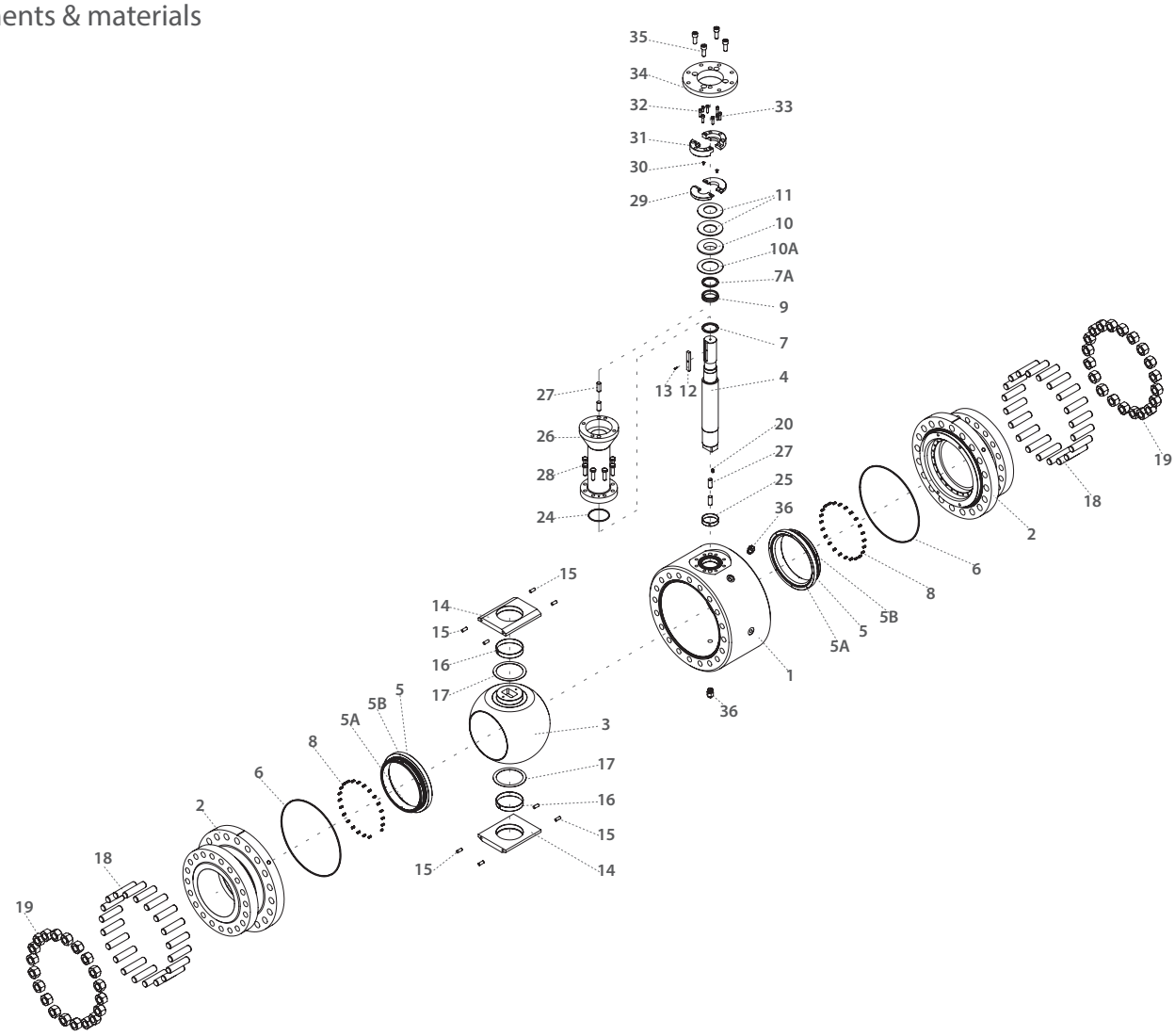

Item	Description	Material Spec. ASTM	Qty.
1	Body	Acc. Ordering Code	1
2	End	Acc. Ordering Code	2
3	Ball	Acc. Ordering Code	1
4	Stem	Acc. Ordering Code	1
5*	Seat	Acc. Ordering Code	2
5A*	Seat insert	Acc. Ordering Code	2
5B*	Seat seal	PTFE+Elgiloy, Graphite	2
6*	Body seal	Graphite	2
7*	Stem thrust seal	PCTFE	1
7A*	Anti-abrasion ring	PCTFE	1
8	Seat spring	Inconel 750	20-44
9*	Stem seal	HermetiX TFM	1
10	Follower	S. Steel	1
10A*	Slide bearing	S. Steel	1
11	Disc spring	S. Steel	2
12	Stem key	S. Steel	1
13	Stem key bolt	S. Steel	1
14	Trunnion plate	A479 316	2
15	Trunnion plate Pin	S. Steel	8

Item	Description	Material Spec. ASTM	Qty.
16	Ball Bearing	PMT 316	2
17	Ball Thrust Washer	PMT 316	2
18	Body Stud	ASTM A320-B8M	16-40
19	Body Nut	A194 8M	16-40
20	Anti-static spring	S. Steel	1
24*	Bonnet seal	Graphite	1
25	Stem bearing	PMT 316	1
26	Bonnet	S. Steel	1
27	Bonnet Pins	S. Steel	4-6
28	Bonnet Bolts	ASTM A320-B8M	4-8
29	Bot Follower	A479 316	2
30	Bot Follower bolt	ASTM A320-B8M	2
31	Top Follower	A479 316	2
32	Top Follower drive bolt	ASTM A320-B8M	6-8
33	Top Follower bolt	ASTM A320-B8M	2
34	Iso Plate	A479 316	1
35	Iso Plate bolt	ASTM A320-B8M	4-8
36	Plug drain/ vent valve	S. Steel	2
37	Tag (not shown)	S.Steel	2

C91 C92 C93 C94 C95 C96

Cryogenic Trunnion Mounted Ball 3 Piece - Ordering Code System

"Mandatory option" options are marked with green background | "Standard offer" options are marked with light green background

1	2	3	4	5	6	7	8	9	10	11	12	13	14	15	16	17	18	19	20	21	22	23	24	.	.	30
6	0		F	C	B	9	3	W	-	6	M	6	5	C	A	G	/	6	0	0						
Size		Features				Series		Design		Body & ends	Stem	Ball & seat ring	Seat feature	Seat insert	Inner Seal	Outer Seal		End connection				Special features				

Size (1-2)		
Code	inch	mm
20	2"	50
30	3"	80
40	4"	100
60	6"	150
80	8"	200
A0	10"	250
A2	12"	300
A4	14"	350

for C91, C92, C93, C94 series only

Features (3-6)	
F	Fire safe
C	Cryogenic design
B	Full port

Series (7-8)	
91	3 Piece design #150 (PN20)
92	3 Piece design #300 (PN50)
93	3 Piece design #600 (PN100)
94	3 Piece design #900 (PN150)
95	3 Piece High pressure #1500 (PN250)
96	3 Piece High pressure #2500 (PN420)

Design (9)	
W	Total HermetiX Integrity package

Body & ends material (11)	
6	S. Steel

Stem material (12)	
M	High Strength S. Steel

Ball & seat ring material (13)	
6	S. Steel

Seat feature (14)	
S	Single Piston Effect (SPE) (API 6D DBB)

Seat insert (15)	
C	PCTFE

Inner Seal (16)	
A	TFM

Outer Seal (17)	
G	Graphite

End Connection (19-22)	
Flanged Raised face	
150	ASME B16.5 #150 RF
300	ASME B16.5 #300 RF
600	ASME B16.5 #600 RF
900	ASME B16.5 #900 RF
1500	ASME B16.5 #1500 RF
2500	ASME B16.5 #2500 RF
PN16	DIN EN 1092-1 PN16
PN40	DIN EN 1092-1 PN40
PN63	DIN EN 1092-1 PN63
PN100	DIN EN 1092-1 PN100
PN160	DIN EN 1092-1 PN160
PN250	DIN EN 1092-1 PN250
PN320	DIN EN 1092-1 PN320
PN400	DIN EN 1092-1 PN400
Flanged RTJ	
600RTJ	ASME B16.5 #600 RTJ
900RTJ	ASME B16.5 #900 RTJ
1500RTJ	ASME B16.5 #1500 RTJ
2500RTJ	ASME B16.5 #2500 RTJ
Welded ends	
XBW*	Extended buttweld sch 40
XBW80	Extended buttweld sch 80
XBW160	Extended buttweld sch 160

C81 C82 C82

Cryogenic Valves

TRUNNION

2 PIECES

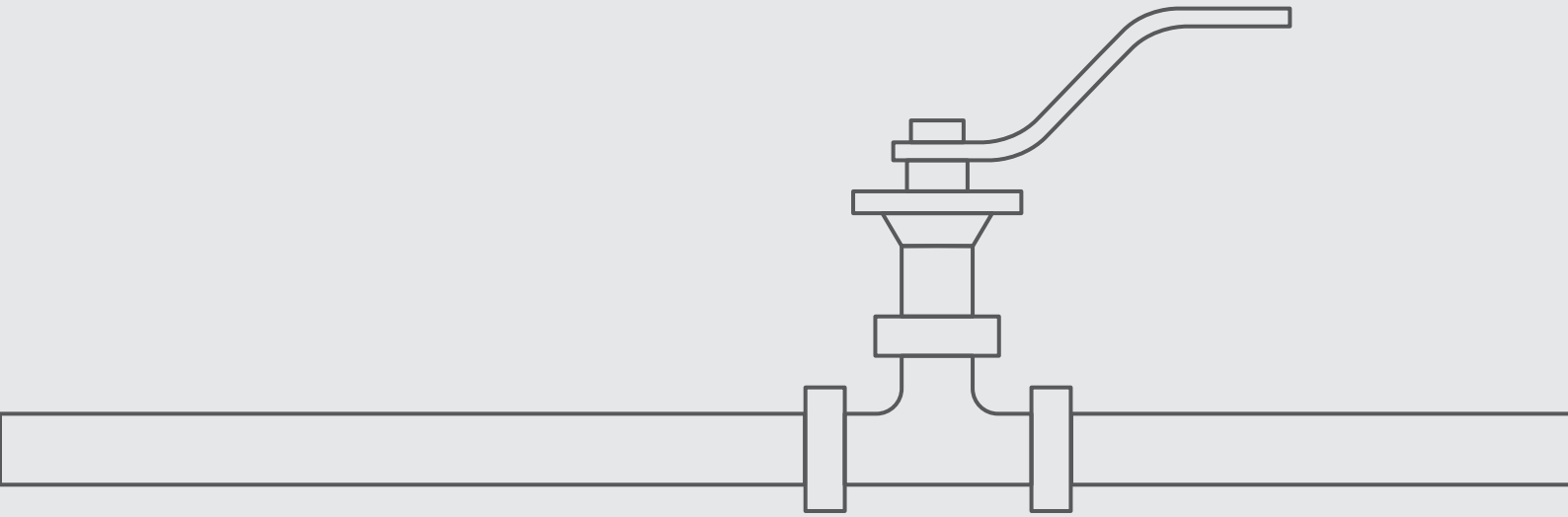

C81 C82 2"-6" | DN50-DN150 | CLASS 150/300

Cryogenic Trunnion Mounted Ball 2 Piece

Valve dimensions

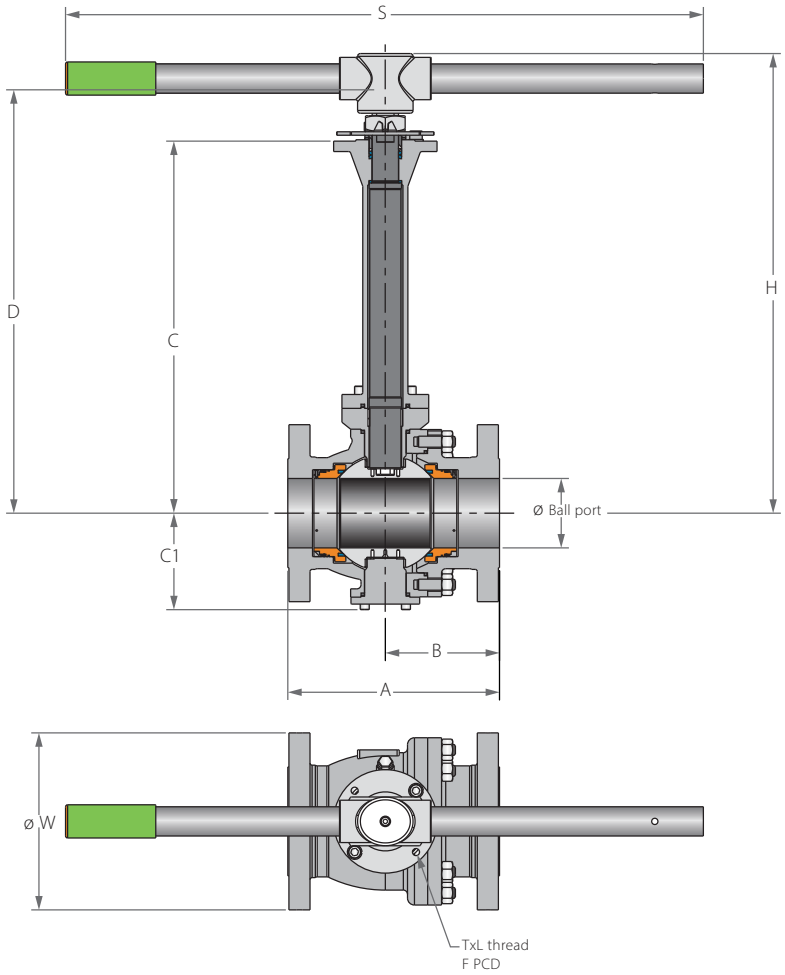

Preparation for actuation

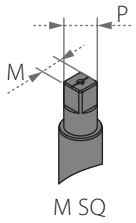

Full port	Unit	Ball port	A		B		C	C1	D	W		M SQ	P SQ	H	S	F		TxL	Weight kg/ib		Kv / Cv	
			150	300	150	300				150	300								150	300	150	300
DN50	mm	49	178	216	89	113.5	500	94	546.5	150	165	18.9	22.70	525.8	401	(F10)	102	M10X15 (4 holes)	24	27	400	363
2"	inch	1.93	7.01	8.5	3.5	4.47	19.69	3.7	21.52	5.91	6.50	0.74	0.89	20.70	15.79		4.02		53	60	463	420
DN80	mm	74	203	283	101.5	154	550	117	619.1	190	210	28.45	35.20	638.6	610	(F12)	125	M12X15 (4 holes)	42	53	1125	952
3"	inch	2.91	7.99	11.14	4	6.06	21.65	4.61	24.37	7.48	8.27	1.12	1.39	25.14	24.02		4.92		93	117	1300	1100
DN100	mm	100	229	305	114.5	164.5	600	139	669.1	230	255	28.45	35.20	662.6	916	(F12)	125	M12X15 (4 holes)	64	76	2154	1860
4"	inch	3.94	9.02	12	4.51	6.48	23.62	5.47	26.34	9.06	10.04	1.12	1.39	26.09	36.06		4.92		141	168	2490	2150
DN150	mm	150	394	403	209.1	207.6	607	191	719.6	280	320	35.9	43.50	777.1	916	(F14)	140	M16X20 (4 holes)	165	176	4723	4628
6"	inch	5.91	15.51	15.87	8.23	8.17	23.9	7.52	28.33	11.02	12.6	1.41	1.71	30.59	36.06		5.51		364	388	5460	5350

Cryogenic Trunnion Mounted Ball 2 Piece

Valve dimensions

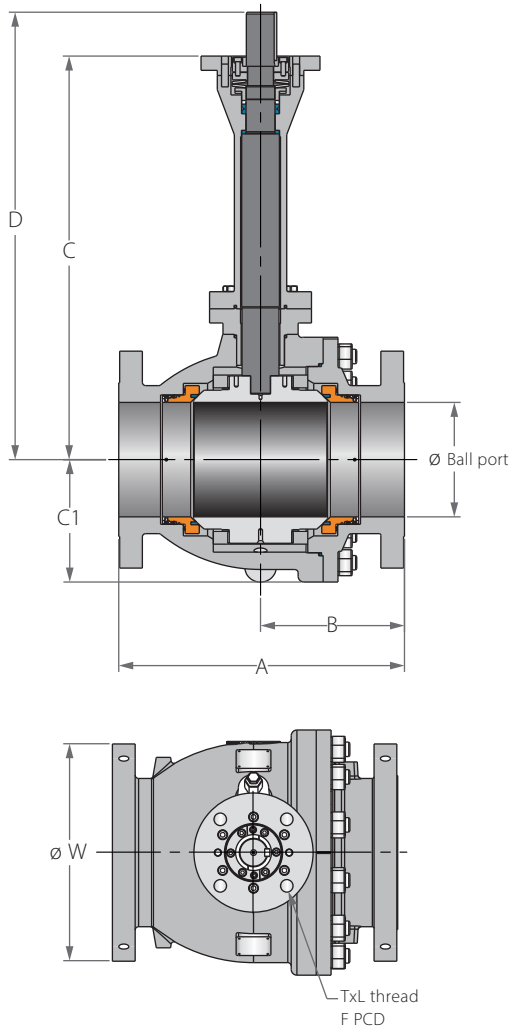

Preparation for actuation

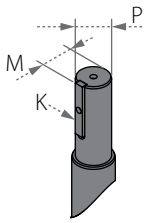

Full port	Unit	Ball port	A		B		C	C1	D	W		P	M	K	F		TxL	Weight kg/ib		Kv / Cv	
			150	300	150	300				150	300							150	300	150	300
DN200	mm	201.00	457.00	502.00	228.50	253.00	708.00	215.00	785.00	345.00	380.00	50.00	54.00	14.00	(F16)	165.00	22x25 (4 holes)	254	292	9273	8737
8"	inch	7.91	17.99	19.76	9.00	9.96	27.87	8.46	30.91	13.58	14.96	1.97	2.13	0.55		6.50		560	644	10720	10100
DN250	mm	252.00	533.00	568.00	270.00	287.50	713.30	260.00	790.40	405.00	445.00	50.00	54.00	14.00	(F25)	254.00	18x25 (8 holes)	404	474	15224	14792
10"	inch	9.92	20.98	22.36	10.63	11.32	28.08	10.24	31.12	15.94	17.52	1.97	2.13	0.55		10.00		891	1045	17600	17100
DN300	mm	303.00	610.00	648.00	298.00	313.00	800.00	300.00	880.50	485.00	520.00	60.00	63.50	18.00	(F25)	254.00	18x25 (8 holes)	594	671	23096	22404
12"	inch	11.93	24.02	25.51	11.73	12.32	31.50	11.81	34.67	19.09	20.47	2.36	2.50	0.71		10.00		1310	1479	26700	25900

Cryogenic Trunnion Mounted Ball 2 Piece

Valve dimensions

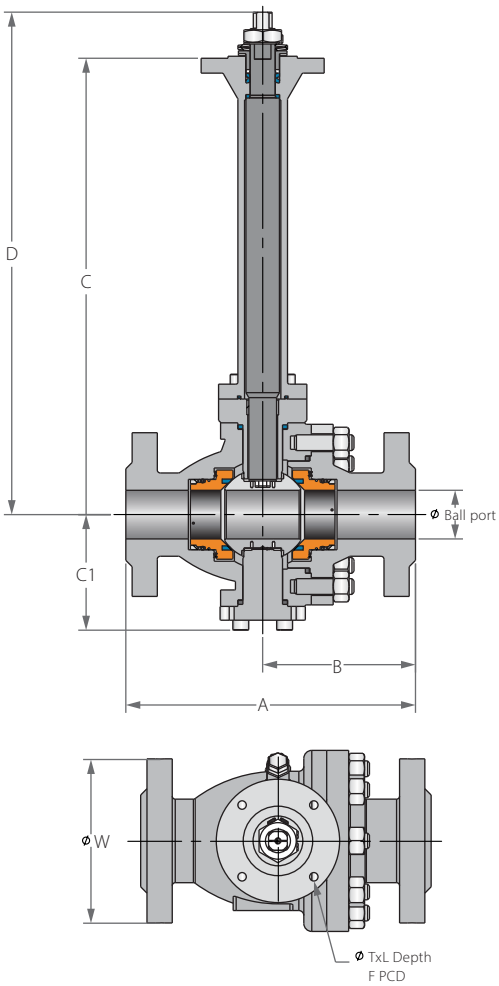

Preparation for actuation

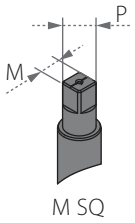

Full port	Unit	Ball port	A	B	C	C1	D	W	M SQ	P SQ	F		TxL	Weight kg/ib	Kv / Cv
DN50	mm	49	292	131	500	119	547.5	165	18.9	22.7	(F10)	102	M10X15 (4 holes)	43	329
2"	inch	1.93	11.5	5.16	19.69	4.69	21.56	6.5	0.74	0.89		4.02		95	380
DN80	mm	74	356	161	550	160	617	210	28.45	35.2	(F12)	125	M12X15 (4 holes)	84.5	874
3"	inch	2.91	14.02	6.34	21.65	6.3	24.29	8.27	1.12	1.39		4.92		186	1010
DN100	mm	100	432	216	600	184	712.6	275	35.9	43.5	(F14)	140	M16X20 (4 holes)	139	1557
4"	inch	3.94	17.01	8.50	23.62	7.24	28.06	10.83	1.41	1.71		5.51		306	1800
DN150	mm	150	559	278	624.5	214.5	737.1	355	35.9	43.5	(F14)	140	M16X20 (4 holes)	275	3893
6"	inch	5.91	22.01	10.94	24.59	8.44	29.02	13.98	1.41	1.71		5.51		606	4500

Cryogenic Trunnion Mounted Ball 2 Piece

Valve dimensions

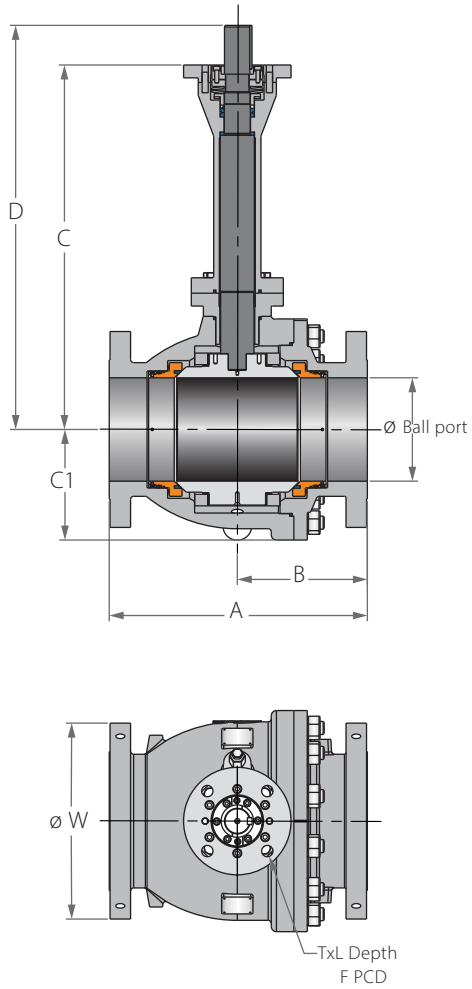

Preparation for actuation

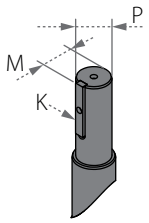

Full port	Unit	Ball port	A	B	C	C1	D	W	P	M	K	F		TxL	Weight kg/ib	Kv / Cv
DN200	mm	201.00	660.00	330.00	696.00	263.00	774.00	420.00	60.00	63.50	14.00	(F25)	254.00	18x25 (8 holes)	475	7742
8"	inch	7.91	25.98	12.99	27.40	10.35	30.47	16.54	2.36	2.50	0.55		10.00		1047	8950
DN250	mm	252.00	787.00	400.00	739.00	310.00	817.00	510.00	60.00	63.50	14.00	(F25)	254.00	18x35 (8 holes)	725	12543
10"	inch	9.92	30.98	15.75	29.09	12.20	32.17	20.08	2.36	2.50	0.55		10.00		1598	14500
DN300	mm	303.00	838.00	419.00	800.00	344.00	915.00	560.00	72.00	76.50	20.00	(F25)	254.00	18x35 (8 holes)	928	19809
12"	inch	11.93	32.99	16.50	31.50	13.54	36.02	22.05	2.83	3.01	0.79		10.00		2046	22900

C81 C82 C83 2"-6"

Cryogenic Trunnion Mounted Ball 2 Piece

Components & materials

Item	Description	Material Spec. ASTM	Qty.
1	Body	Acc. Ordering Code	1
2	End	Acc. Ordering Code	1
3	Ball	Acc. Ordering Code	1
4	Stem	Acc. Ordering Code	1
5*	Seat	Acc. Ordering Code	2
5A*	Seat insert	Acc. Ordering Code	2
5B*	Seat seal	PTFE+Elgiloy, Graphite	2
6*	Body seal	Graphite	1
7*	Stem thrust seal	PCTFE	1
7A*	Anti-abrasion ring	PCTFE	1
8	Seat spring	Inconel 750	20-32
9 *	Stem seal	HermetiX TFM	1
10	Follower	S. Steel	1
10A*	Slide bearing	S. Steel	1
12	Stem nut	S. Steel	1
13	Tab lock washer	S. Steel	1
16	Ball Bearing	PMT 316	2
17	Ball Thrust Washer	PMT 316	1
18	Body Stud	ASTM A320-B8M	4-20
19	Body Nut	A194 8M	4-20
20	Anti-static spring	S. Steel	1
21	Gland Plate	A479 316/ 316L	1
22*	Gland Plate Seal	Graphite	1
22A*	Outer trunnion seal	Graphite	1
23	Gland Plate Bolts	ASTM A320-B8M	4-8
24*	Bonnet seal	Graphite	1
25	Stem bearing	PMT 316	1
26	Bonnet	S. Steel	1
27	Bonnet Pins	S. Steel	2
27A	Gland Pins	S. Steel	2
28	Bonnet Bolts	ASTM A320-B8M	4-8
36	Plug drain/ vent valve	S. Steel	2
37	Tag (not shown)	S.Steel	1
38	Outer trunnion	A479 316	1
39	Outer trunnion bolts	ASTM A320-B8M	4-8
40	Pipe handle	S. Steel	1
40A	Stop plate	S. Steel	1
40B	Wrench head	S. Steel	1
41	Wrench head bolt	S. Steel	1
42	Stop bolt	S. Steel	2
42A	Spring washer	S. Steel	2
43	Sleeve	PCV	1

* Repair kit components

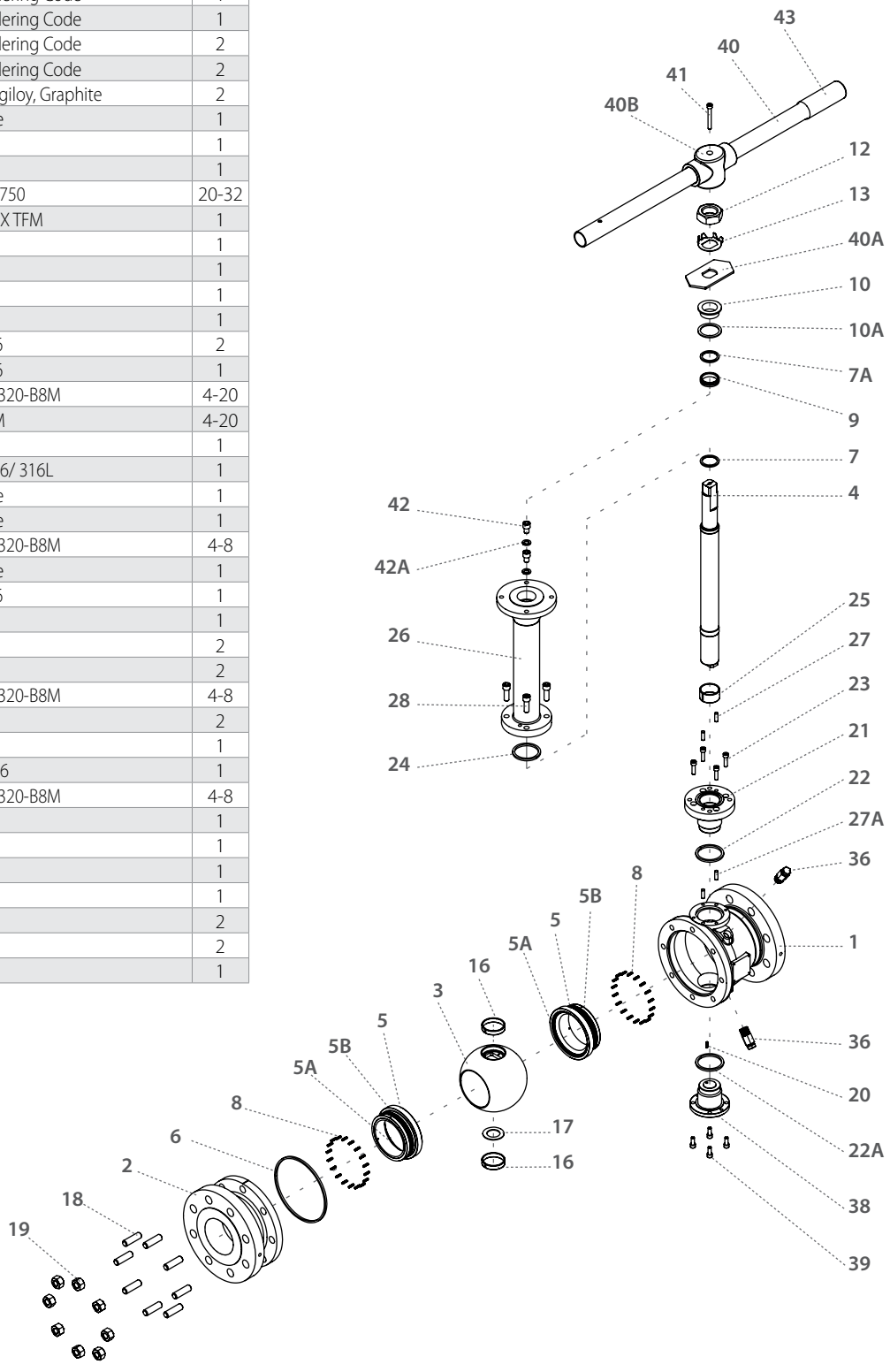

Cryogenic Trunnion Mounted Ball 2 Piece

Components & materials

Item	Description	Material Spec. ASTM	Qty.
1	Body	Acc. Ordering Code	1
2	End	Acc. Ordering Code	1
3	Ball	Acc. Ordering Code	1
4	Stem	Acc. Ordering Code	1
5*	Seat	Acc. Ordering Code	2
5A*	Seat insert	Acc. Ordering Code	2
5B*	Seat seal	PTFE+Elgiloy, Graphite	2
6*	Body seal	Graphite	1
7*	Stem thrust seal	PCTFE	1
7A*	Anti-abrasion ring	PCTFE	1
8	Seat spring	Inconel X750	20-44
9*	Stem seal	HermetiX TFM	1
10	Follower	S. Steel	1
10A	Slide bearing	S. Steel	1
11	Disc spring	S. Steel	2
12	Stem key	S. Steel	1
13	Stem key bolt	S. Steel	1
14	Trunnion plate	A479 316	2
15	Trunnion plate Pin	S. Steel	8
16	Ball Bearing	PMT 316	2
17	Ball Thrust Washer	PMT 316	2
18	Body Stud	ASTM A320-B8M	8-20
19	Body Nut	A194 8M	8-20
20	Anti-static spring	S. Steel	1
21(1)	Gland Plate	A479 316	1
22(1)*	Gland Plate Seal	Graphite	1
23(1)	Gland Plate Bolts	ASTM A320-B8M	6-8
24*	Bonnet seal	Graphite	1
25	Stem bearing	PMT 316	1
26	Bonnet	S. Steel	1
27	Bonnet Pin	S. Steel	4-6
28	Bonnet Bolts	ASTM A320-B8M	4-8
29	Bot Follower	A479 316	2
30	Bot Follower bolt	ASTM A320-B8M	2
31	Top Follower	A479 316	2
32	Top Follower drive bolt	ASTM A320-B8M	6-8
33	Top Follower bolt	ASTM A320-B8M	2
34	Iso Plate	A479 316	1
35	Iso Plate bolt	ASTM A320-B8M	4-8
36	Plug drain/ vent valve	S. Steel	2
37	Tag (not shown)	S.Steel	1-2

* Repair kit components

(1) At 8" size

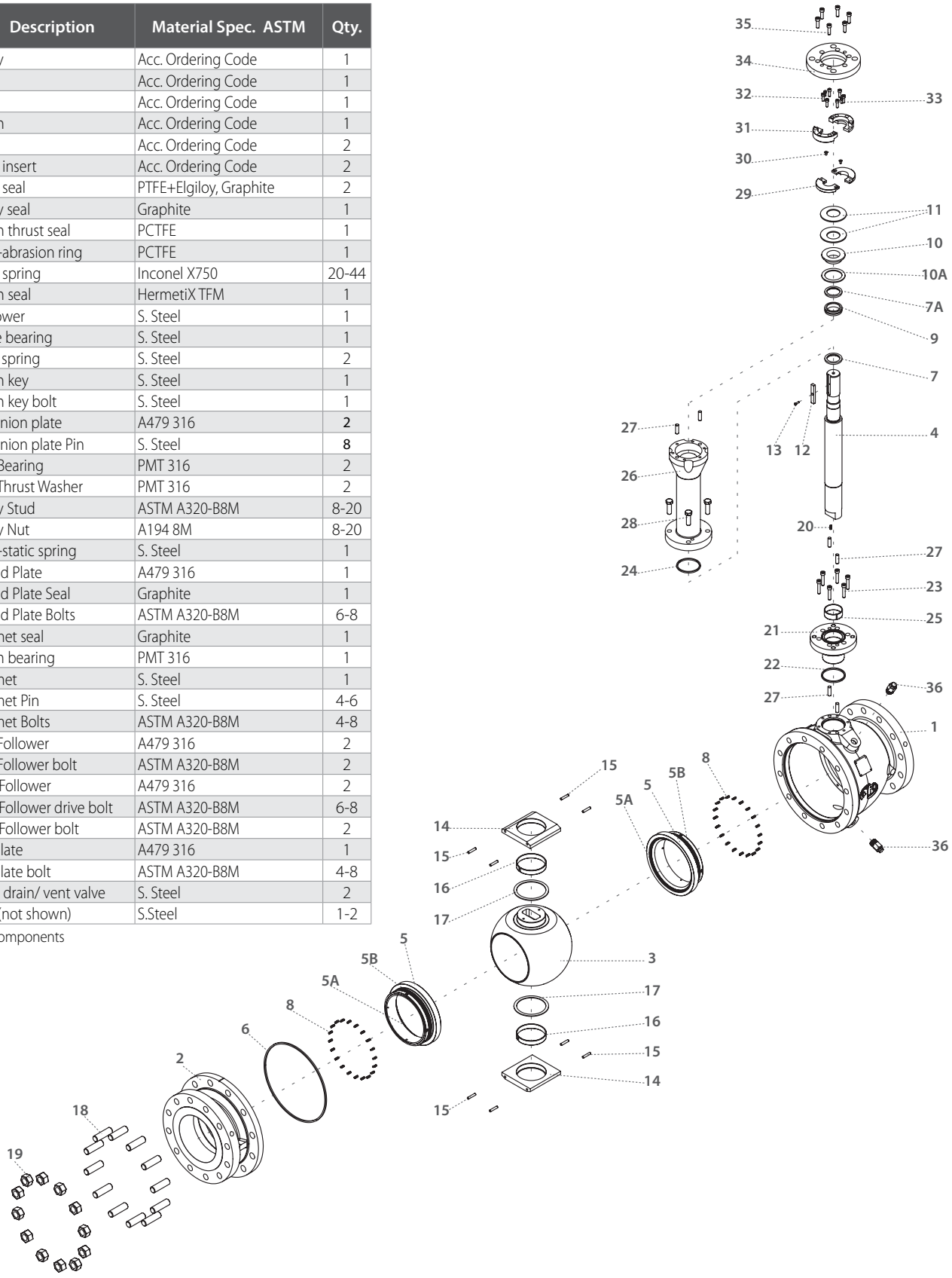

C81 C82 C83

Cryogenic Trunnion Mounted Ball 2 Piece - Ordering Code System

"Mandatory option" options are marked with green background | "Standard offer" options are marked with light green background

1	2	3	4	5	6	7	8	9	10	11	12	13	14	15	16	17	18	19	20	21	22	23	24	.	.	30
8	0		F	**C**	**B**	8	1	**W**	-	6	M	6	5	C	A	G	/	1	5	0						
Size		Features				Series		Design		Body & ends	Stem	Ball & seat ring	Seat feature	Seat insert	Inner Seal	Outer Seal		End connection				Special features				

Size (1-2)		
Code	inch	mm
20	2"	50
30	3"	80
40	4"	100
60	6"	150
80	8"	200
A0	10"	250
A2	12"	300

Features (3-6)	
F	Fire safe
C	Cryogenic design
B	Full port

Series (7-8)	
81	ASME B16.5 #150 Flanged RF
82	ASME B16.5 #300 Flanged RF
83	ASME B16.5 #600 Flanged RF

Design (9)	
W	Total HermetiX Integrity package

Body & ends material (11)	
6	S. Steel

Stem material (12)	
M	High Strength S. Steel

Ball & seat ring material (13)	
6	S. Steel

Seat feature (14)	
S	Single Piston Effect (SPE) (API 6D DBB)

Seat insert (15)	
C	PCTFE

Inner Seal (16)	
A	TFM

Outer Seal (17)	
G	Graphite

End Connection (19-22)	
150	ASME B16.5 #150 RF
300	ASME B16.5 #300 RF
600	ASME B16.5 #600 RF

C47 C26

Cryogenic Valves

FLOATING BALL

3 PIECES

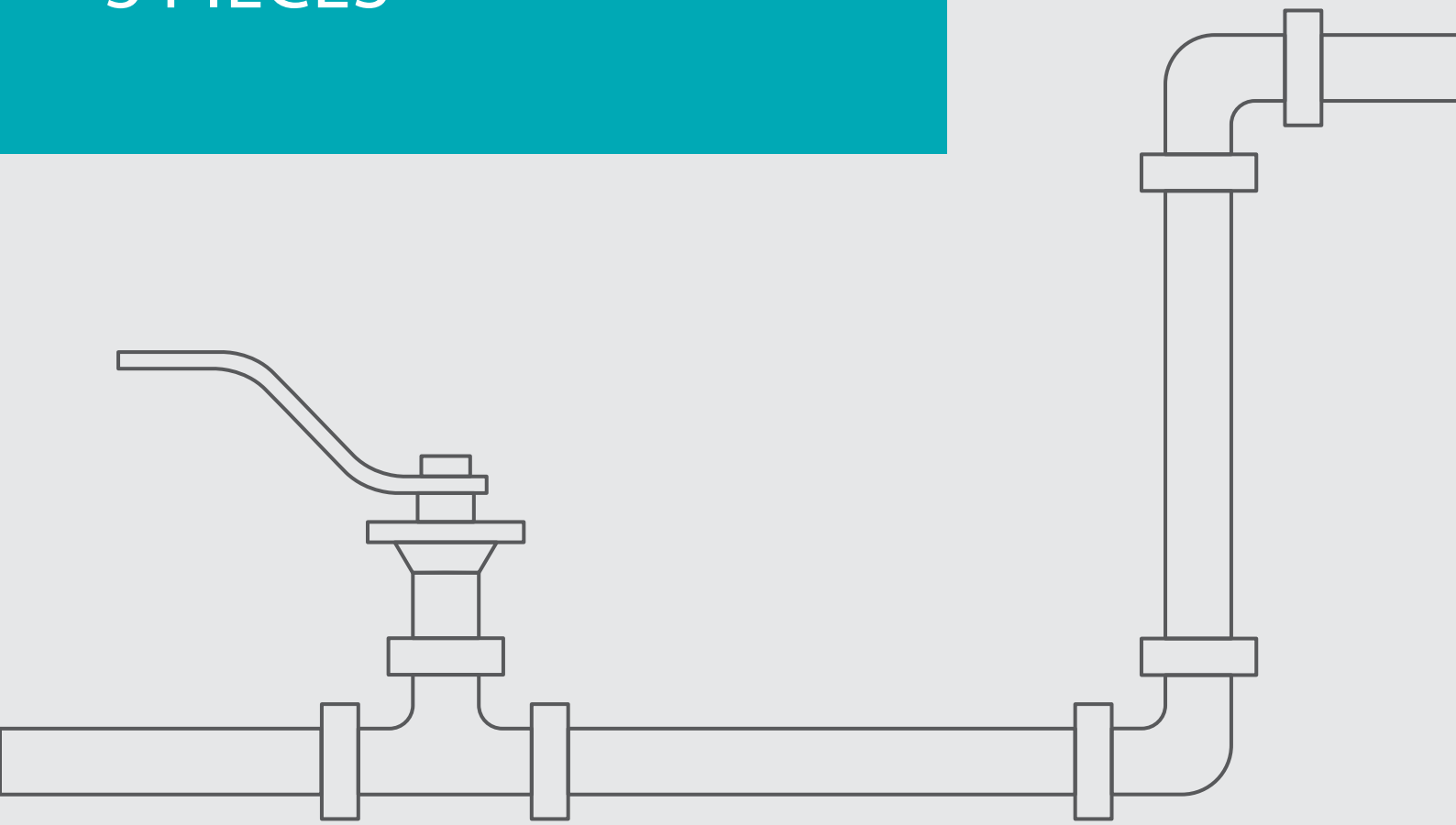

Cryogenic Floating Ball 3 Piece; BD - Bidirectional

PATENT PENDING

Valve dimensions

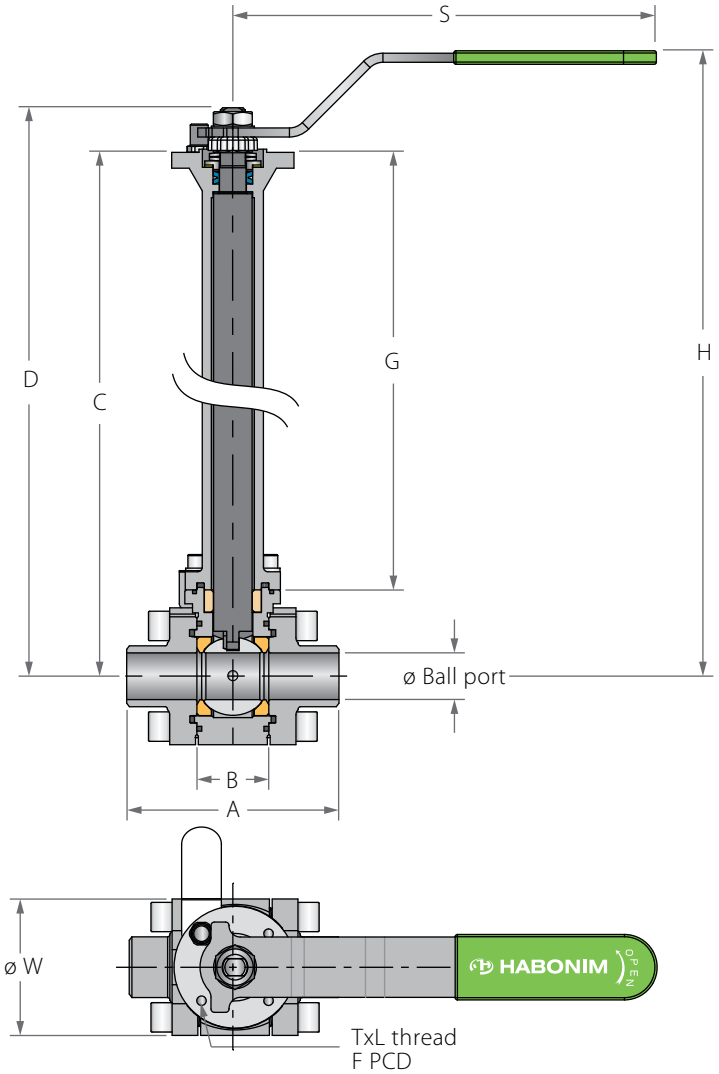

Bidirectional Cryogenic floating ball Valve

- Cryogenic floating ball valves with bidirectional sealing capability allows it to be used on a bidirectional loading and offloading single pipeline as well as a shutoff valve for a storage tank, developing back pressure to the downstream side while empty without upstream line pressure.
- This valves are equipped with all the benefits of the standard cryogenic ball valve on top of the simplicity and flow capabilities of a floating ball design.
- Full Δp
- ASME Class 300
- Special "Piston Effect" at seat design to prevent pressure buildup in the cavity.

Preparation for actuation

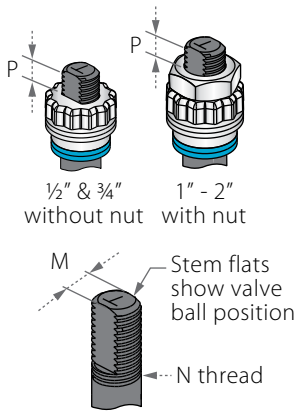

Std. port	Full port	Unit	Ball port	A	B	Standard design				6.0" bonnet				S	W	M	N	P	F		TxL	Weight kg/lb		Kv
						C	D	G	H	C	D	G	H									Std.	6.0"	Cv
	DN8	mm	11.15	65.8	20.6	333	341.9	304	366	181.40	190.30	152.40	214.40	150.00	4.60	5.50	3/8"	7.20	(F03)	36.00	M5X7	1.60	1.28	2.6
	1/4"	inch	0.44	2.59	0.81	13.11	13.46	11.97	14.41	7.14	7.49	6.00	8.44	5.91	1.81	0.22	UNF	0.28		1.42		3.53	2.82	3.0
DN15	DN10	mm	11.15	65.80	20.60	333.00	341.90	304.00	366.00	181.40	190.30	152.40	214.40	150.00	46.00	5.50	3/8"	7.20	(F03)	36.00	M5X7	1.60	1.28	7
½"	3/8"	inch	0.44	2.59	0.81	13.11	13.46	11.97	14.41	7.14	7.49	6.00	8.44	5.91	1.81	0.22	UNF	0.28		1.42		3.53	2.82	8
DN20	DN15	mm	14.30	70.55	24.55	335.40	344.30	304.00	368.00	183.80	192.70	152.40	216.40	150.00	52.00	5.50	3/8"	7.20	(F03)	36.00	M5X7	1.80	1.48	10
¾"	½"	inch	0.56	2.78	0.97	13.20	13.56	11.97	14.49	7.24	7.59	6.00	8.52	5.91	2.05	0.22	UNF	0.28		1.42		3.97	3.26	12
DN25	DN20	mm	20.60	93.65	31.75	342.15	359.65	304.00	383.00	190.55	208.05	152.40	231.40	187.00	60.50	7.54	7/16"	7.20	(F04)	42.00	M5X7	3.00	2.65	28
1"	¾"	inch	0.81	3.69	1.25	13.47	14.16	11.97	15.08	7.50	8.19	6.00	9.11	7.32	2.38	0.30	UNF	0.28		1.65		6.61	5.84	32
DN32	DN25	mm	25.40	108.25	41.25	346.65	364.15	304.00	388.00	195.05	212.55	152.40	236.40	187.00	69.00	7.54	7/16"	7.20	(F04)	42.00	M5X10	3.70	3.35	37
1¼"	1"	inch	1.00	4.25	1.62	13.65	14.34	11.97	15.28	7.68	8.37	6.00	9.31	7.32	2.72	0.30	UNF	0.28		1.65		8.16	7.39	43
DN40	DN32	mm	31.80	115.45	48.25	347.55	377.05	304.00	400.00	195.95	225.45	152.40	248.40	237.00	79.20	8.71	9/16"	8.00	(F05)	50.00	M6X8	5.20	4.65	70
1½"	1¼"	inch	1.25	4.55	1.90	13.68	14.84	11.97	15.75	7.71	8.88	6.00	9.78	9.29	3.12	0.34	UNF	0.31		1.97		11.46	10.25	81
DN50	DN40	mm	38.10	127.10	56.30	352.25	381.75	304.00	405.00	200.65	230.15	152.40	253.40	237.00	90.70	8.71	9/16"	8.50	(F05)	50.00	M6X8	6.10	5.53	103
2"	1½"	inch	1.50	5.00	2.22	13.87	15.03	11.97	15.94	7.90	9.06	6.00	9.98	9.29	3.57	0.34	UNF	0.33		1.97		13.45	12.19	119

Components & materials

Note: for C47

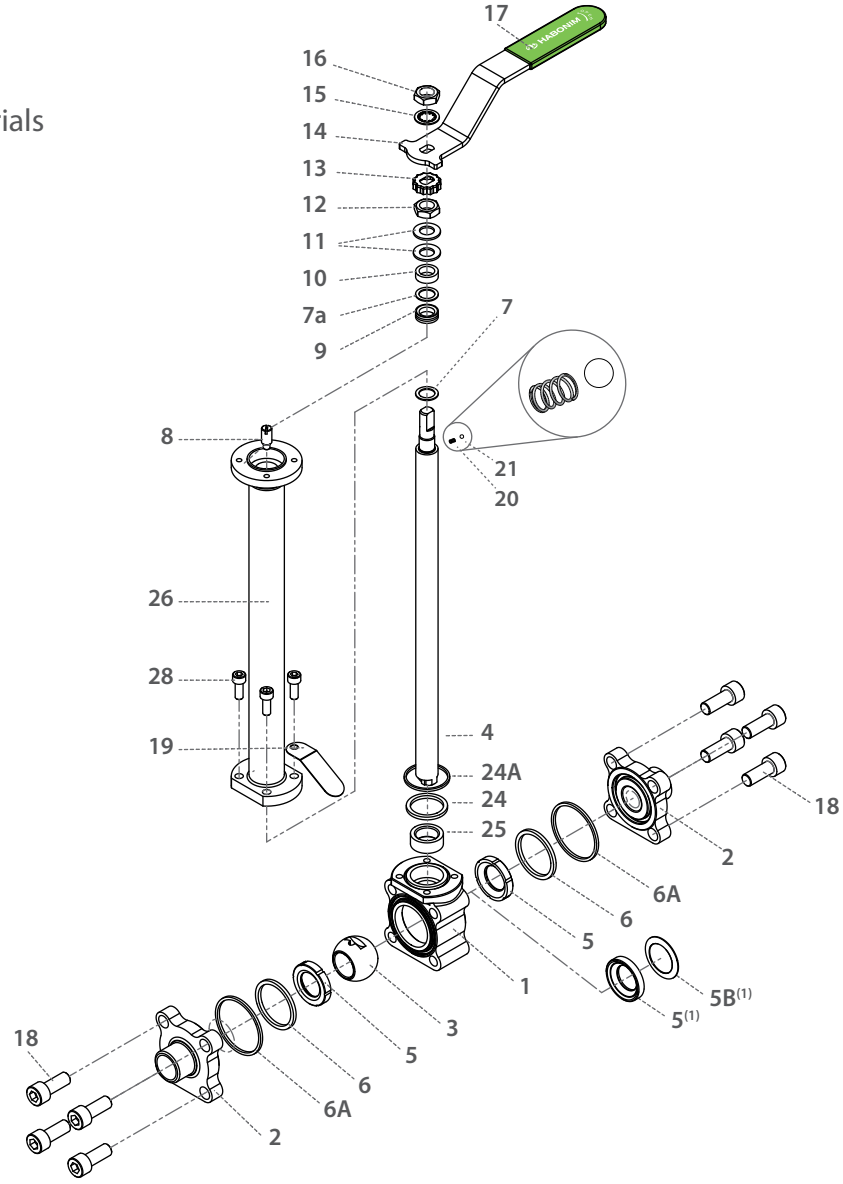

Item	Description	Material specifications	Qty.
1	Body	Acc. Ordering Code	1
2	End	Acc. Ordering Code	2
3	Ball	Acc. Ordering Code	1
4	Stem	Acc. Ordering Code	1
5*	Seat	Acc. Ordering Code	2
5B	Upstream seat spring	Inconel 718	1
6*	Inner seal	TFM	2
6A*	Outer seal	Acc. Ordering Code	2
7*	Stem thrust seal	PCTFE	1
7a*	Anti-abrasion ring	PCTFE	1
8	Stop pin	S. Steel	1
9*	Stem seal	TFM	1
10	Follower	S. Steel	1
10A	Slide bearing	S. Steel	1
11	Disc spring	S. Steel	2
12	Stem nut	S. Steel	1
13	Locking clip	S. Steel	1

Item	Description	Material specifications	Qty.
14	Handle	S. Steel	1
15	Serrated washer	S. Steel	1
16	Handle nut	S. Steel	1
17	Sleeve	PVC	1
18	Body bolt	S. Steel	8
20	Anti-static spring	S. Steel	1
21	Anti-static plunger	S. Steel	1
22	Arrow flow	S. Steel	2
23	Tag (not shown)	S. Steel	1
24*	Bonnet inner seal	TFM	1
24A*	Bonnet outer seal	Acc. Ordering Code	1
25*	Stem bearing	PTFE	1
26	Bonnet	S. Steel	1
28	Bolt	S. Steel	4
30	Dog tag	S. Steel	1

* Repair kit components

(1) Optional Dynemic seat design

Cryogenic Floating Ball 3 Piece ; BD - Bidirectional

Valve dimensions

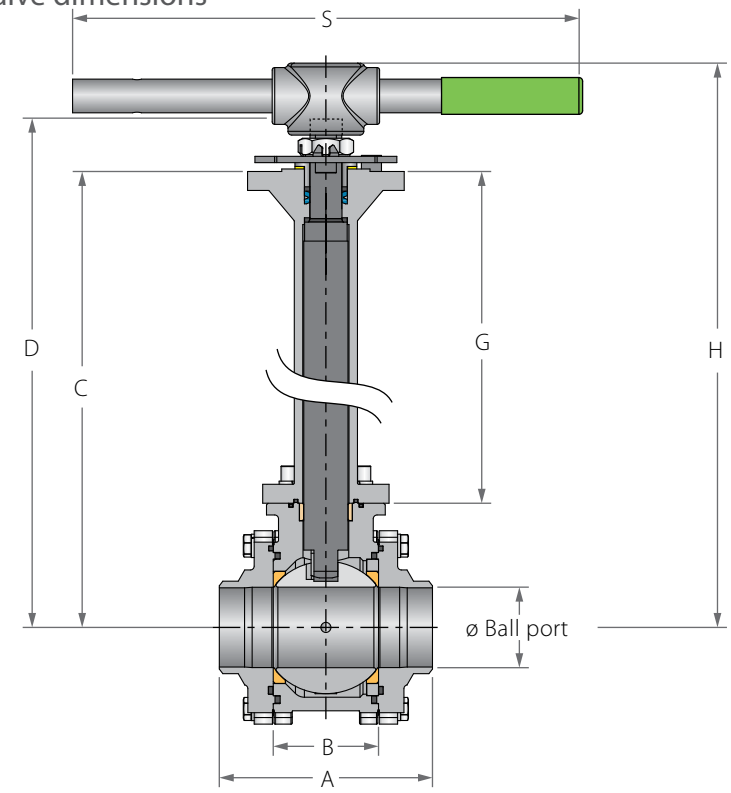

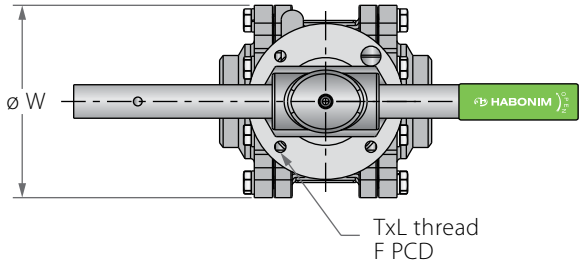

Bidirectional Cryogenic floating ball Valve

- Cryogenic floating ball valves with bidirectional full Δp sealing capability allows it to be used on a bidirectional loading and offloading single pipeline as well as a shutoff valve for a storage tank, developing back pressure to the downstream side while empty without upstream line pressure.
- This valves are equipped with all the benefits of the standard cryogenic ball valve on top of the simplicity and flow capabilities of a floating ball design.
- Full Δp
- ASME Class 150
- Special "Piston Effect" at seat design to prevent pressure buildup in the cavity.

Preparation for actuation

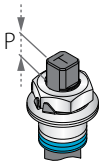

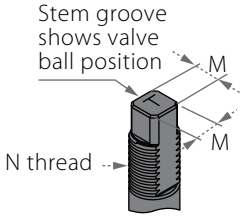

Std. port	Full port	Unit	Ball port	A	B	Standard design				6.0" bonnet				S	W	M	M DD	N	P	F		TxL	Weight kg/lb		Kv
						C	D	G	H	C	D	G	H										Std.	6.0"	Cv
DN65	DN50	mm	50.80	157.95	72.55	397.5	439.1	327.5	464	222.4	264	152.4	288.9	401	108	13.9	13.9	M20x2.5	13.15	(F07)	70	M8x8	12	10.6	205
2½"	2"	inch	2	6.22	2.86	15.65	17.29	12.89	18.27	8.76	10.39	6	11.37	15.79	4.25	0.55	0.55		0.52		2.76		26.46	23.37	240
DN80	DN65	mm	63.5	169.35	83.25	441.8	488.4	343.5	528	250.7	297.3	152.4	336.9	401	153	18.9	15.9	1"-14 UNS-2A	16.7	(F10)	102	M10x15	20	18.8	385
3"	2½"	inch	2.5	6.67	3.28	17.39	19.23	13.52	20.79	9.87	11.7	6	13.26	15.79	6.02	0.74	0.63		0.66		4.02		44.09	41.45	450
DN100	DN80	mm	82.6	213.6	108.8	457.6	504.2	343.5	544	266.5	313.1	152.4	352.9	610	191.5	18.9	15.9	1"-14 UNS-2A	16.7	(F10)	102	M10x15	30.5	29.3	615
4"	3"	inch	3.25	8.41	4.28	18.02	19.85	13.52	21.42	10.49	12.33	6	13.89	24.02	7.54	0.74	0.63		0.66		4.02		67.24	64.6	720
	DN100	mm	100	239	123	466.8	513.4	343.5	555	275.7	322.3	152.4	363.9	610	217	18.9	15.9	1"-14 UNS-2A	16.7	(F10)	102	M10x15	37.3	36.1	744
	4"	Inch	3.94	9.41	4.84	18.38	20.21	13.52	21.85	10.85	12.69	6	14.33	24.02	8.54	0.74	0.63		0.66		4.02		82.23	79.59	870
DN150		mm	111.1	346.1	146.1	542.4	611.9	385	665	309.8	379.3	152.4	432.4	916	266	28.45	23.75	1½"-12 UNS-1A	26.2	(F12)	125	M12x15	75	71	872
6"		inch	4.37	13.63	5.75	21.35	24.09	15.16	26.18	12.2	14.93	6	17.02	36.06	10.47	1.12	0.94		1.03		4.92		165.35	156.53	1020

Components & materials

Note: for C47

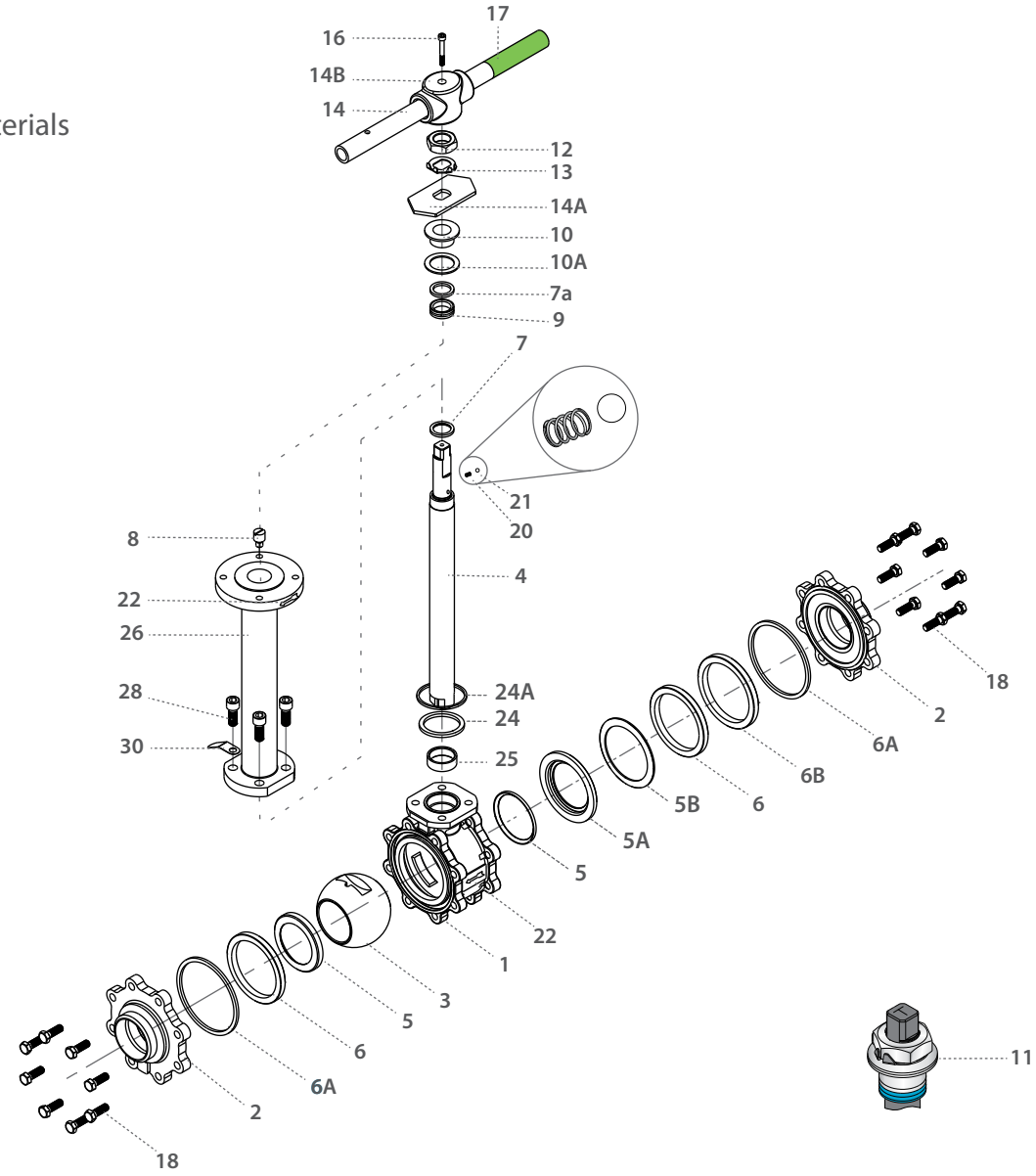

Item	Description	Material specifications	Qty.
1	Body	Acc. Ordering Code	1
2	End	Acc. Ordering Code	2
3	Ball	Acc. Ordering Code	1
4	Stem	Acc. Ordering Code	1
5*	Seat	Acc. Ordering Code	2
5A	Seat housing	S. Steel	1
5B	Upstream seat spring	Inconel 718	1
6*	Inner seal	TFM	2
6A*	Outer seal	Acc. Ordering Code	2
6B	Support ring	S. Steel	1
7*	Stem thrust seal	TFM, PCTFE	1
7a*	Anti-abrasion ring	TFM, PCTFE	1
8	Stop pin	S. Steel	1
9*	Stem seal	TFM, Graphite	1
10	Follower	S. Steel	1
10A	Slide bearing	S. Steel	1
11	Disc spring	S. Steel	2
12	Stem nut	S. Steel	1
13	Tab lock washer	S. Steel	1

Item	Description	Material specifications	Qty.
14	Handle	S. Steel	1
14A	Stop plate	S. Steel	1
14B	Wrench head	S. Steel	1
16	Wrench bolt	S. Steel	1
17	Sleeve	PVC	1
18	Body bolt	S. Steel	8
20	Anti-static spring	S. Steel	2
21	Anti-static plunger	S. Steel	2
22	Arrow flow	S. Steel	2
23	Tag (not shown)	S. Steel	1
24*	Bonnet inner seal	TFM	1
24A*	Bonnet outer seal	Acc. Ordering Code	1
25*	Stem bearing	PTFE	1
26	Bonnet	S. Steel	1
28	Bolt	S. Steel	4
30	Dog tag	S. Steel	1

* Repair kit components

Cryogenic Floating Ball 3 Piece

Valve dimensions

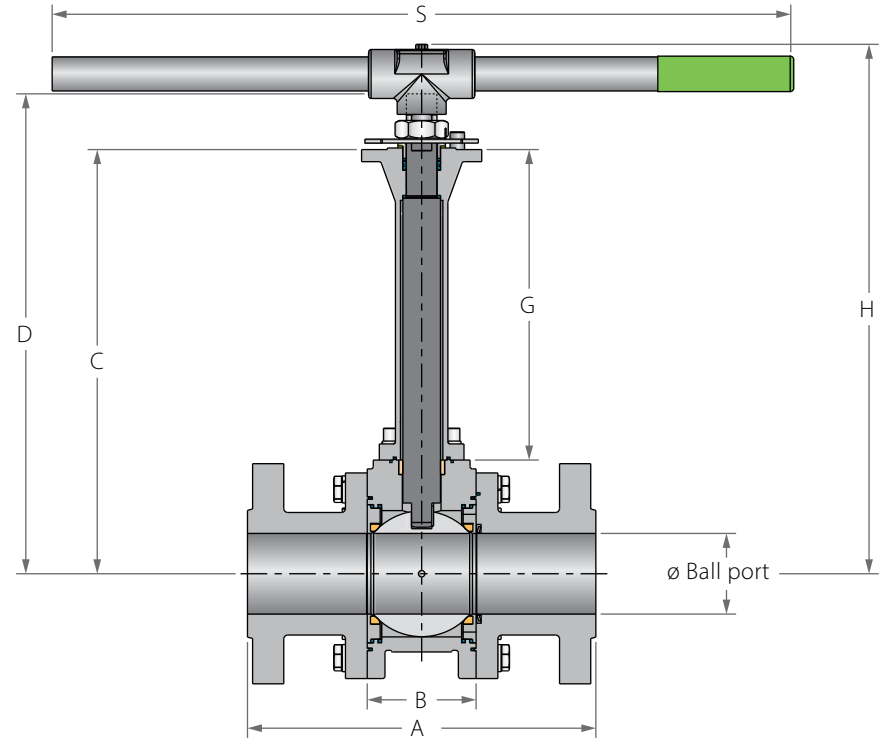

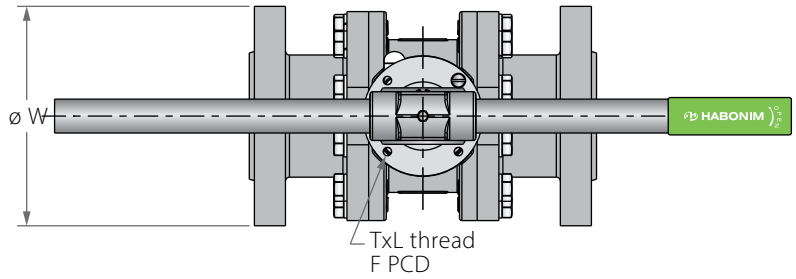

Preparation for actuation

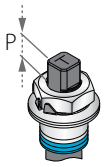

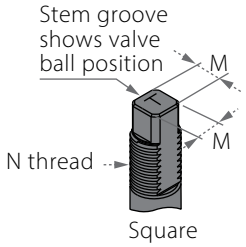

Full Port	Unit	Ball port	A		B	Standard design				6.0" bonnet				S	W	M	M DD	N	P	F		TxL	Weight Kg/lb (Welded)		Kv
			Welded	#600		C	D	G	H	C	D	G	H										Std.	6.0"	Cv
DN50	mm	51.05	200	292	75	432.5	479.1	345	431	239.9	286.5	152.4	238.4	401	165	18.9	15.9	1" - 14 UNS-2A	16.7	(F10)	102	M10X15	25	22	421
2"	inch	2.01	7.87	11.5	2.95	17.03	18.86	13.58	16.97	9.44	11.28	6	9.39	15.79	6.5	0.74	0.63		0.66		4.02		55	48	492
DN80	mm	80	356	356	110	511.5	580.6	385	632	278.9	348	152.4	399.4	916	210	28.45	23.75	1-½" UNF-2A	26.2	(F12)	125	M12X15	50	45	983
3"	inch	3.15	14.02	14.02	4.33	20.14	22.86	15.16	24.88	10.98	13.7	6	15.72	36.06	8.27	1.12	0.94		1.03		4.92		110	99	1150
DN100	mm	100	400	432	135	527.3	596.4	385	646.5	294.7	363.8	152.4	413.9	916	275	28.45	23.75	1-½" UNF-2A	26.2	(F12)	125	M12X15	75	70	1807
4"	inch	3.94	15.75	17.01	5.31	20.76	23.48	15.16	25.45	11.6	14.32	6	16.3	36.06	10.83	1.12	0.94		1.03		4.92		165	154	2114
DN150	mm	150	490	559	190	579	691.65	385	-	346.4	459.05	152.4	-	-	355	35.92	35.92	2" UN-2A	40	(F14)	140	M16X20	155	140	4310
6"	inch	5.91	19.29	22.01	7.48	22.8	27.23	15.16	-	13.64	18.07	6	-	-	13.98	1.41	1.41		1.57		5.51		341	308	5043
DN200	mm	200	500	660	275	630	785	385	-	397.4	510.05	152.4	-	-	420	45.9	45.9	2-¾" UN-2A	50	(F16)	165	M20X30	400	380	7970
8"	inch	7.87	19.69	25.98	10.83	24.8	30.9	15.16	-	15.65	20.08	6	-	-	16.54	1.81	1.81		1.97		6.5		880	836	9325

Cryogenic Floating Ball 3 Piece

Components & materials

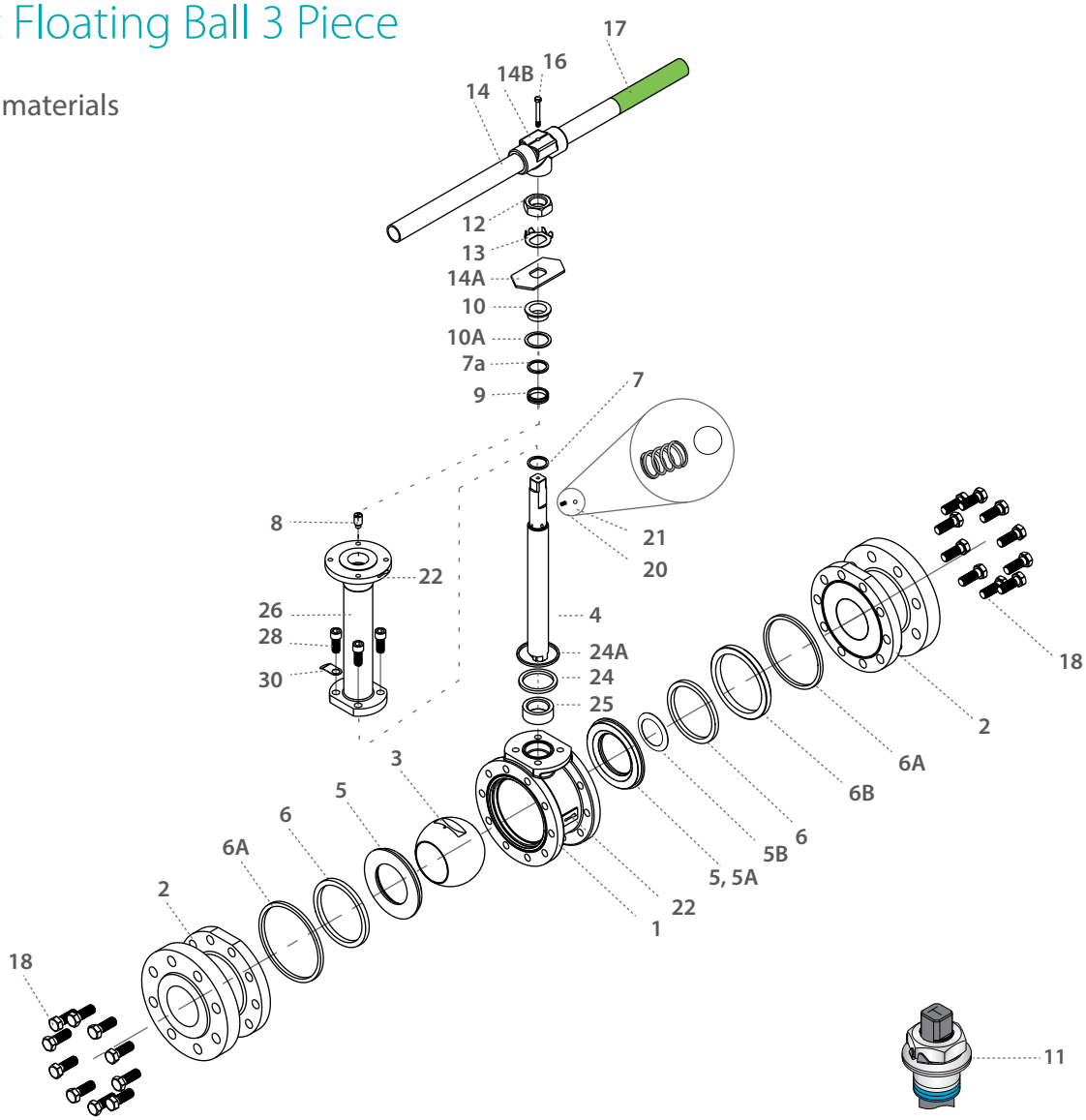

Item	Description	Material specifications	Qty.
1	Body	Acc. Ordering Code	1
2	End	Acc. Ordering Code	2
3	Ball	Acc. Ordering Code	1
4	Stem	Acc. Ordering Code	1
5*	Seat	Acc. Ordering Code	2
5A	Seat housing	S. Steel	2
5B	Upstream seat spring	Inconel 718	1
6*	Inner seal	TFM	2
6A*	Outer seal	Acc. Ordering Code	2
6B	Support ring	S. Steel	1
7*	Stem thrust seal	PCTFE	1
7a*	Anti-abrasion ring	PCTFE	1
8	Stop pin	S. Steel	1
9*	Stem seal	TFM	1
10	Follower	S. Steel	1
10A	Slide bearing	S. Steel	1
11	Disc spring	S. Steel	2
12	Stem nut	S. Steel	1

Item	Description	Material specifications	Qty.
13	Tab lock washer	S. Steel	1
14**	Handle	S. Steel	1
14A	Stop plate	S. Steel	1
14B	Wrench head	S. Steel	1
16	Wrench bolt	S. Steel	1
17	Sleeve	PVC	1
18	Body bolt	S. Steel	20-32
20	Anti-static spring	S. Steel	2
21	Anti-static plunger	S. Steel	2
22	Arrow flow	S. Steel	2
23	Tag (not shown)	S. Steel	1
24*	Bonnet inner seal	TFM	1
24A*	Bonnet outer seal	Acc. Ordering Code	1
25*	Stem bearing	PTFE	1
26	Bonnet	S. Steel	1
28	Bolt	S. Steel	4
30	Dog tag	S. Steel	1

* Repair kit components
** Gear operator should be used for size 6" DN150 and above (handle components are not included)

C47 C47-BD

Cryogenic Floating Ball 3 Piece; BD - Bidirectional - Ordering Code System

"Mandatory option" options are marked with green background | "Standard offer" options are marked with light green background

1	2	3	4	5	6	7	8	9	10	11	12	13	14	15	16	17	18	19	20	21	22	23	24	.	.	30
6	0			F	C	4	7	W	-	6	6	6	M	A	A	G	/	B	W			-				
Size		Features				Series		Design		Body material	Ends material	Ball material	Stem material	Seat material	Inner Seal	Outer Seal		End connection					Special features			

Size (1-2)		
Code	inch	mm
02	¼"	8
03	⅜"	10
05	½"	15
07	¾"	20
10	1"	25
12	1¼"	32
15	1½"	40
20	2"	50
25	2½"	65
30	3"	80
40	4"	100
60	6"	150
80	8"	200

Features (3-6)	
F	Fire safe
C	Cryogenic design
B	Full port
N	Control service

Series (7-8)	
47	3 Piece Floating

Design (9)	
W	Total HermetiX Integrity package

Body material (11)	
6	CF8M
1	Bronze
7	Monel

End material (12)	
6	CF3M
1	Bronze
7	Monel

Ball material (13)	
6	S. Steel 316L
1	Bronze
7	monel

Stem material (14)	
M	High Strength S. Steel
6	S. Steel
Z	Inconel

Seat material (15)	
A	TFM
C	PCTFE
P	CF PTFE

Inner Seal Material (16)	
A	TFM
G	Expanded graphite

Outer Seal Material (17)	
G	Expanded graphite
A	TFM

End connections (19-22)	
Welded	
BW10	Buttweld schd. 10
BW	Buttweld schd. 40
XBW10	Extended buttweld schd. 10
XBW	Extended buttweld schd. 40
BW5	Buttweld schd. 5
BW80	Buttweld schd. 80
BWO *	Buttweld tube OD
BWD	Buttweld DIN 11860
BWI	buttweld ISO
SW	Socket weld
SWO *	Socket weld tube OD
XBW80	Extended Buttweal 80
XSW	Extended socket weld
ETO *	Extended tube OD
ETI	Extended buttweld ISO
ETD	Extended buttweld DIN
XYZ	Copper tube (Metric)
ETB	Extended copper tube
* Std. port only	
Threaded	
NPT	ASME B1.20.1 - National Pipe Taper thread
MNPT	Male NPT
BSPT	EN 10226 - Pipe Taper thread
MBSPT	Male BSPT
BSPP	ISO228-1, DIN3852 - Pipe parallel thread
DIN3852	DIN3852 - Pipe Parallel thread
AS5202	SAE internal straight thread
Flanged	
150	ASME B16.5 #150 RF
300	ASME B16.5 #300 RF
600	ASME B16.5 #600 RF
900	ASME B16.5 #900 RF
PN16	EN1092 PN16 RF
PN40	EN1092 PN40 RF
PN64	EN1092 PN64 RF
PN100	EN1092 PN100 RF
PN160	EN1092 PN160 RF
Clamp	
GR	"Grayloc© compatible hub (Grayloc© is a registered trademark of Grayloc Products, L.L.C.)"
TC *	Tri-Clamp
LL *	Compression fitting (Imperial)
LM *	Compression fitting (metric)

* Std. port only

Special Features (24-30)	
6.0	Short bonnet
BD	Bi-Directional Design
RJT	Ring Type Joint
B	Body made from rolled bar
EP	Electropolished
Vxx	V port, xx=angle
G...	Internal surface finish (G24, G32)
VBxx	Characterized control ball, xx=angle
FF	Flat face
SPR	Spring loaded seat

Cryogenic Floating Ball 3 Piece - Ordering Code System

"Mandatory option" options are marked with green background | "Standard offer" options are marked with light green background

1	2	3	4	5	6	7	8	9	10	11	12	13	14	15	16	17	18	19	20	21	22	23	24	.	.	30
6	0		F	C	B	2	6		-	6	6	6	M	F	A	G	/	B	W			-				
Size		Features				Series		Design		Body material	Ends material	Ball material	Stem material	Seat material	Inner Seal	Outer Seal		End connection					Special features			

Size (1-2)		
Code	inch	mm
20	2"	50
30	3"	80
40	4"	100
60	6"	150
80	8"	200

Features (3-6)	
C	Cryogenic design
N	Control

Series (7-8)	
26	

Body material (11)	
6	S. Steel
1	Bronze

End material (12)	
6	S. Steel
1	Bronze

Ball material (13)	
6	S. Steel 316L

Stem material (14)	
M	High Strength S. Steel
Z	Inconel

Seat material (15)	
F	Hybrid Seat (info in special features)

Inner Seal Material (16)	
A	TFM
G	Expanded graphite

Outer Seal Material (17)	
G	Expanded graphite
A	TFM

End connections (19-22)	
Welded	
BW *	Buttweld schd. 40
BW10	Buttweld schd. 10
BW80	Buttweld schd. 80
SW	Socket weld
XBW10	Extended buttweld schd. 10
XBW	Extended buttweld schd. 40
XSW	Extended socket weld

* Up to 4" only

Flanged	
150	ASME B16.5 #150 RF
300	ASME B16.5 #300 RF
600	ASME B16.5 #600 RF
PN16	EN1092 PN16 RF
PN40	EN1092 PN40 RF
PN64	EN1092 PN64 RF
PN100	EN1092 PN100 RF
Flanged RTJ	
600RTJ	ASME B16.5 #600 RTJ
Clamp	
GR	Grayloc© compatible hub (Grayloc© is a registered trademark of Grayloc Products, L.L.C.)

Hybrid Seats (24-27)

Insert material		Upstream/ Downstream		Insert Shape		Seal Type	
A	TFM	0	Hybrid seats on upstream and downstream, spring loaded	0	Scraper	5	Seal 1: TFM; Seal 2: Expanded graphite
P	CF PTFE					6	Seal 1: TFM
C	PCTFE						

Special Features (24-30)	
6.0	Short bonnet
Vxx	V port
VBxx	Characterized control ball

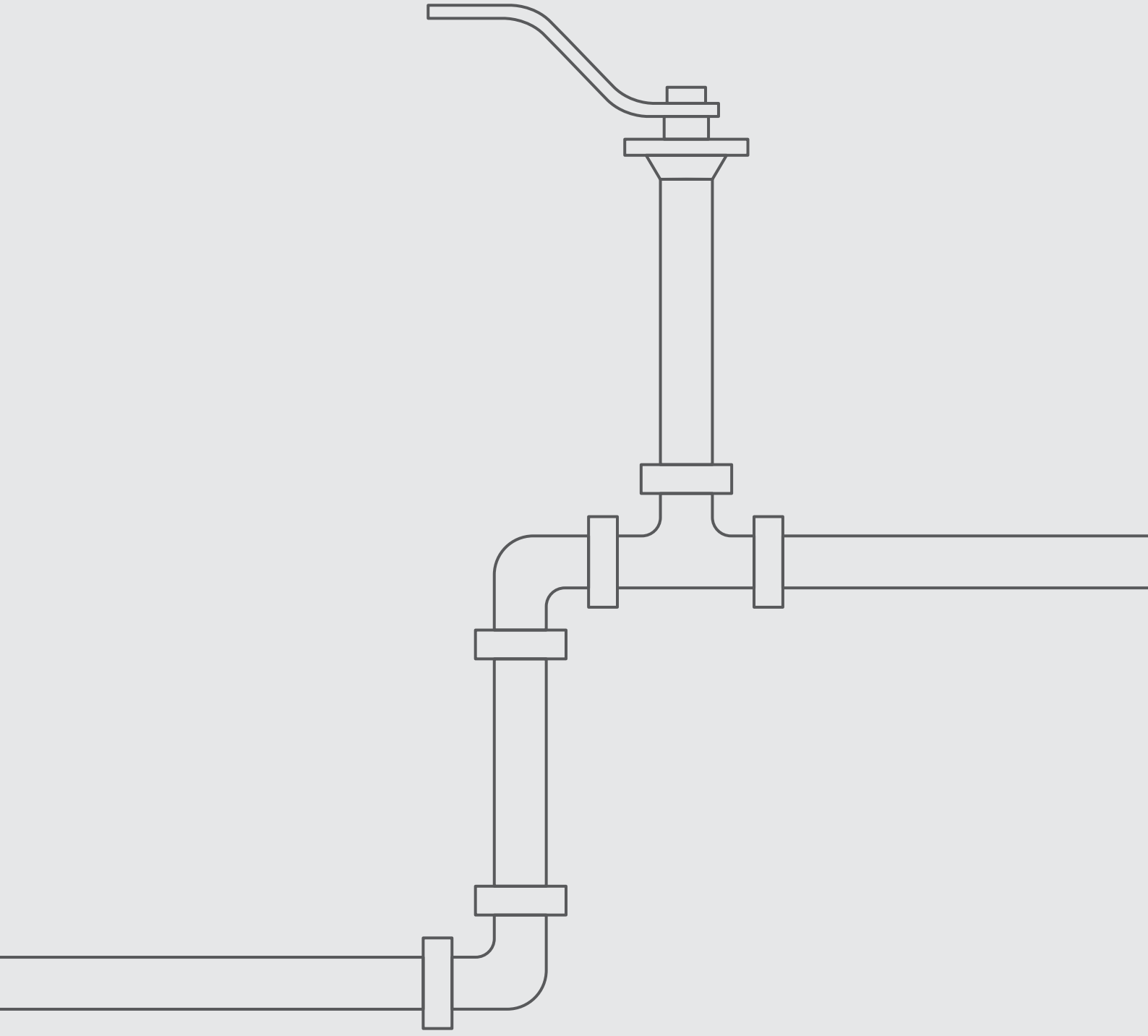

C28

Cryogenic Valves

FLOATING BALL

HIGH PRESSURE
3 PIECES

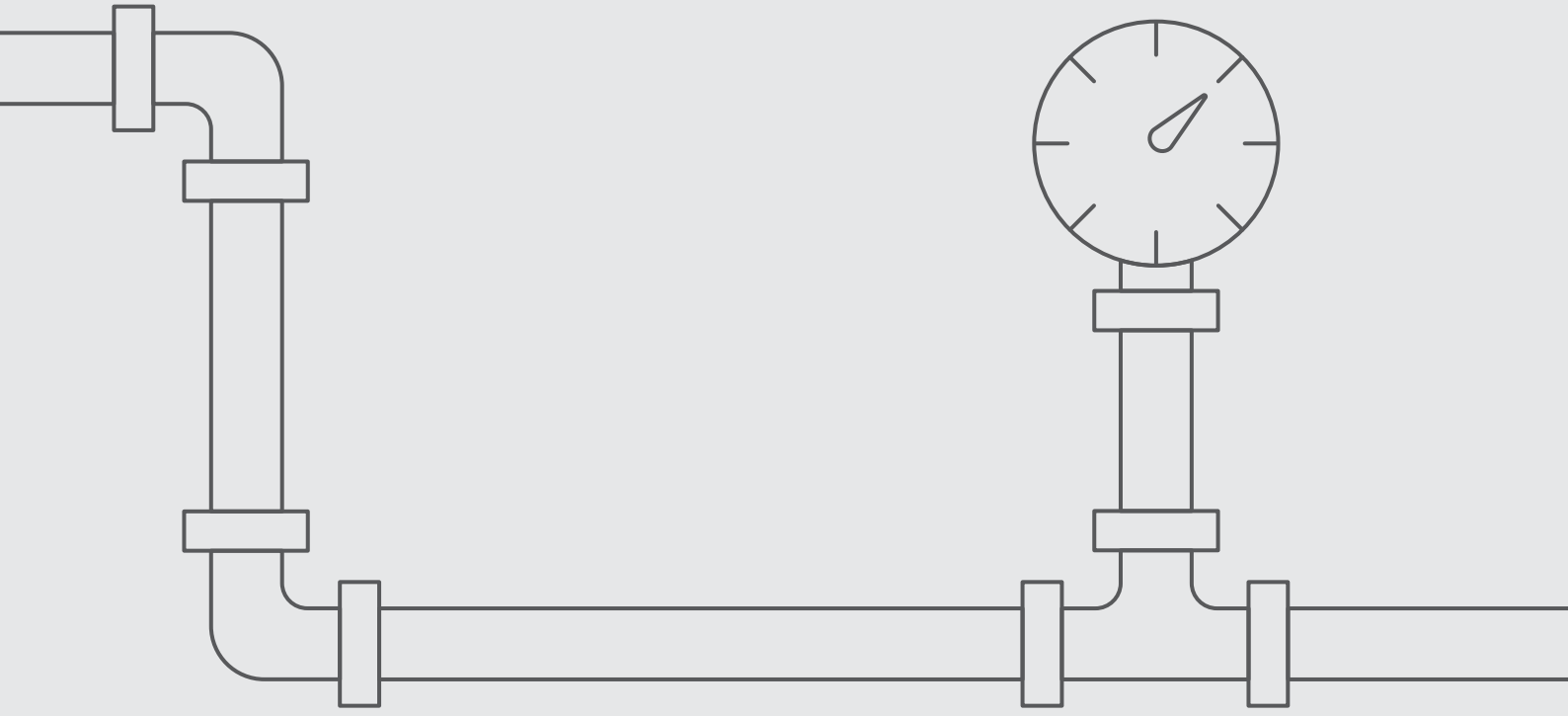

Cryogenic High Pressure Floating Ball 3 Piece

Valve dimensions

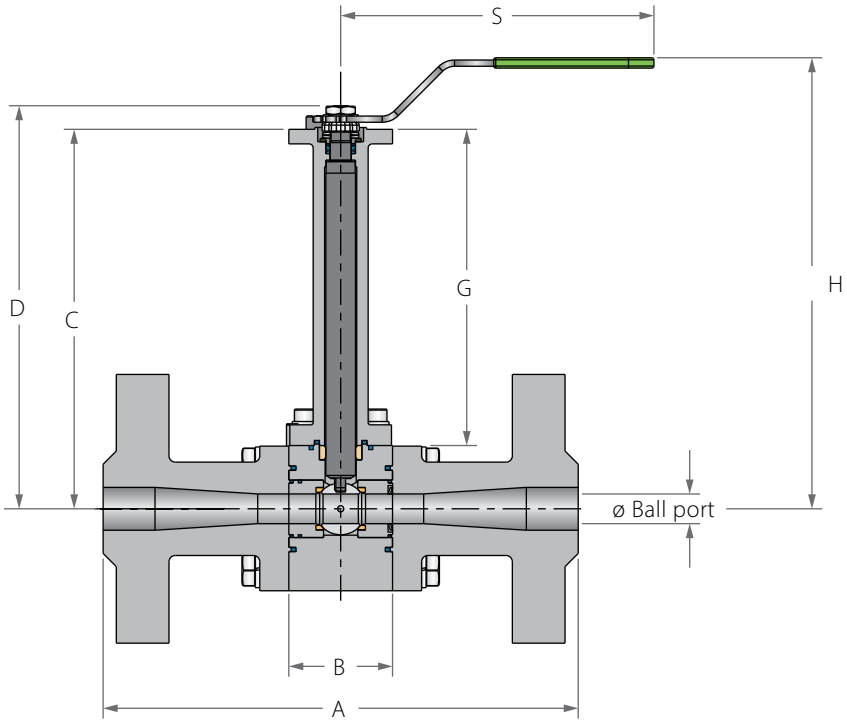

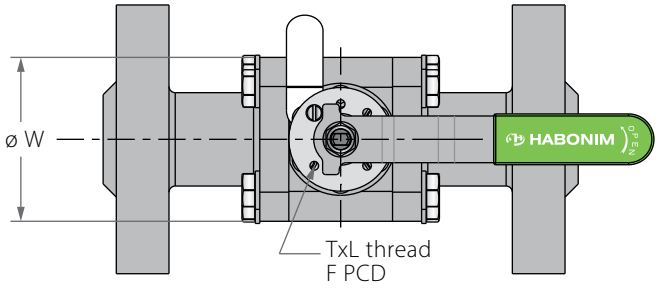

Preparation for actuation

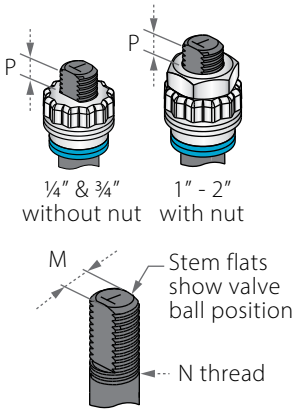

Std. port	Full port	Unit	Ball port	A				B	Standard design				6.0" bonnet				S	W	M	N	P	F		TxL	Kv
				Welded	Threaded	#1500	#2500		C	D	G	H	C	D	G	H									Cv
DN15	DN8,DN10	mm	11.15	173.6	107.2	216	264	50	333	341.9	304	380.6	181.4	190.3	152.4	229	150	78	5.50	⅜"	7.2	F03	36	M5X8	6.9
½"	⅜"	inch	0.44	6.83	4.22	8.50	10.39	1.97	13.11	13.46	11.97	14.98	7.14	7.49	6	9.02	5.91	3.07	0.22	UNF	0.28		1.42		8
DN20	DN15	mm	13	188.6	120	229	273	60	338.1	355.6	304	386.6	186.5	204	152.4	235	187	98	7.5	7/16"	7.2	F04	42	M5X7	10
¾"	½"	inch	0.51	7.43	4.72	9.02	10.75	2.36	13.31	14	11.97	15.22	7.34	8.03	6	9.25	7.36	3.86	0.3	UNF	0.28		1.65		12
DN25	DN20	mm	20.65	208.6	144.2	254	308	68	347.75	377.25	304	401.6	196.15	225.65	152.4	250	237	114	8.65	9/16"	7.2	F05	50	M6X8	28
1"	¾"	inch	0.81	8.21	5.68	10	12.13	2.68	13.69	14.85	11.97	15.81	7.72	8.88	6	9.84	9.33	4.49	0.34	UNF	0.28		1.97		32
DN32	DN25	mm	25.5	211.6	152	279	349	68	355.5	385	304	410	203.9	233.4	152.4	258.4	237	124	8.65	9/16"	8	F05	50	M6X8	49
1¼"	1"	inch	1	8.33	5.98	10.98	13.74	2.68	14	15.16	11.97	16.14	8.03	9.19	6	10.17	9.33	4.88	0.34	UNF	0.31		1.97		

Cryogenic High Pressure Floating Ball 3 Piece

Components & materials

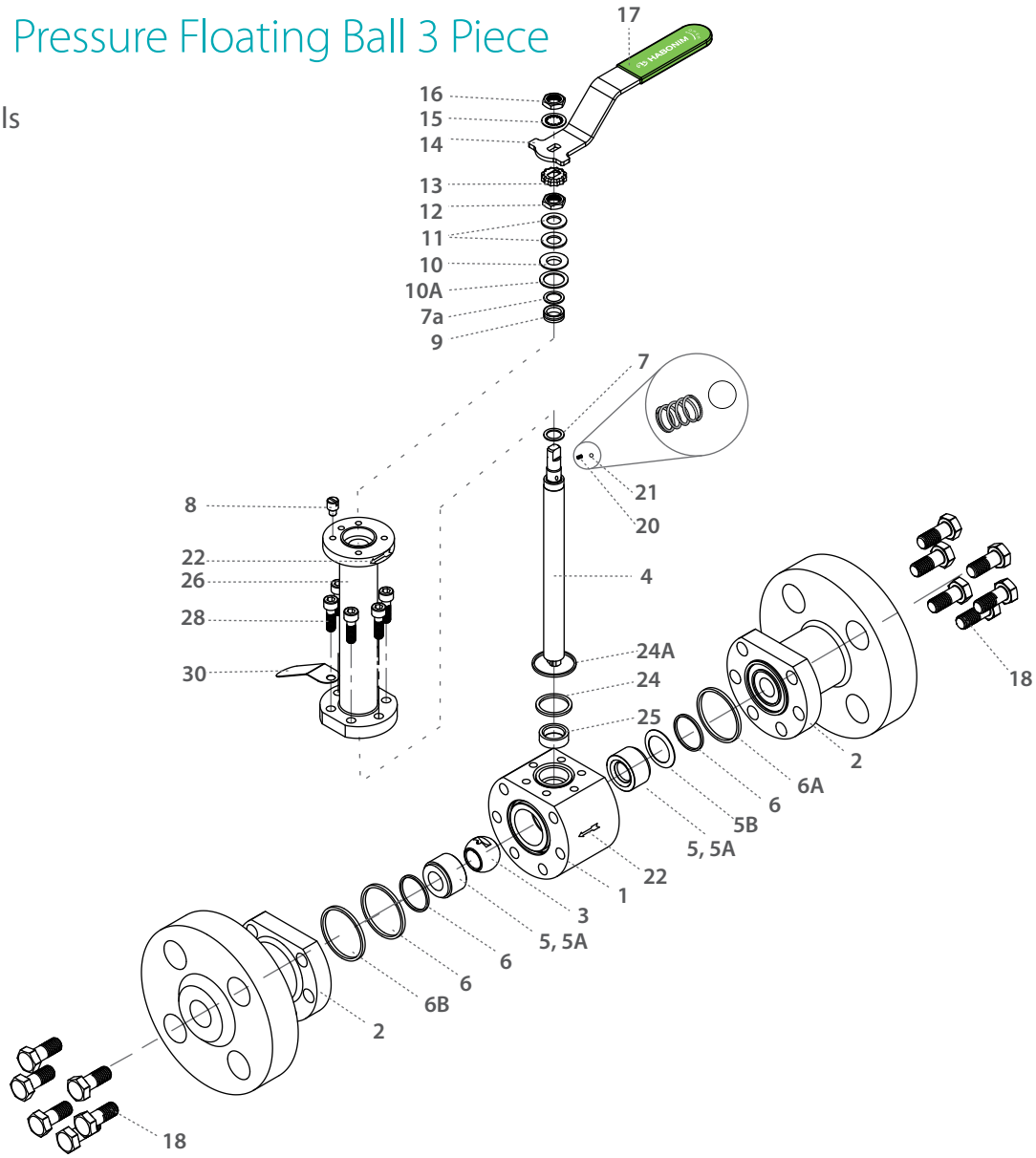

Item	Description	Material specifications	Qty.
1	Body	Acc. Ordering Code	1
2	End	Acc. Ordering Code	2
3	Ball	Acc. Ordering Code	1
4	Stem	Acc. Ordering Code	1
5*	Seat	Acc. Ordering Code	2
5A*	Seat housing	S. Steel	2
5B	Upstream seat spring	Inconel 718	1
6*	Inner seal	TFM	2
6A*	Outer seal	Acc. Ordering Code	2
6B*	Graphite string	Graphite	1
7*	Stem thrust seal	PCTFE	1
7a*	Anti-abrasion ring	PCTFE	1
8	Stop pin	S. Steel	1
9*	Stem seal	TFM	1
10	Follower	S. Steel	1
10A	Slide bearing	S. Steel	1
11	Disc spring	S. Steel	2
12	Stem nut	S. Steel	2

Item	Description	Material specifications	Qty.
13	Locking clip	S. Steel	1
14	Handle	S. Steel	1
15	Serrated washer	S. Steel	1
16	Handle nut	S. Steel	1
17	Sleeve	PVC	1
18	Body bolt	S. Steel	8-16
20	Anti-static spring	S. Steel	2
21	Anti-static plunger	S. Steel	2
22	Arrow flow	S. Steel	2
23	Tag (not shown)	S. Steel	1
24*	Bonnet inner seal	TFM	1
24A*	Bonnet outer seal	Acc. Ordering Code	1
25*	Stem bearing	PTFE	1
26	Bonnet	S. Steel	1
28	Bolt	S. Steel	4-6
30	Dog tag	S. Steel	1

* Repair kit components

Cryogenic High Pressure Floating Ball 3 Piece

Valve dimensions

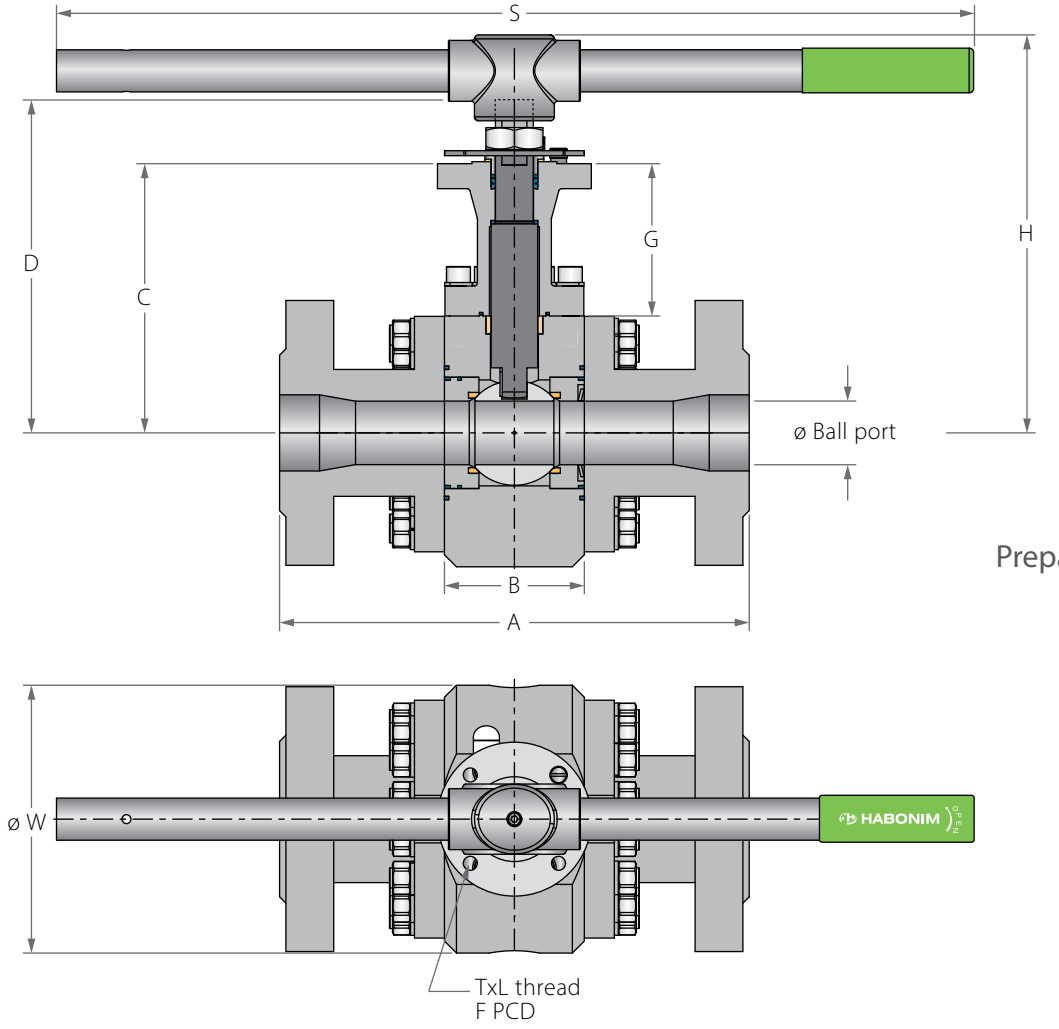

Preparation for actuation

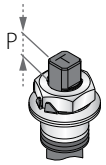

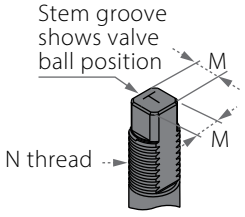

Std. port	Full port	Unit	Ball port	A				B	Standard design				6.0" bonnet				S	W	M	M DD	N	P	F		TxL	Kv
				Welded	Threaded	#1500	#2500		C	D	G	H	C	D	G	H										Cv
DN40	DN32	mm	31.8	262	179	305	384	95	357	398.6	304	425	205.4	247	152.4	273.4	400	140	13.9	13.9	M20X2.5	8	(F07)	70	M8X7	69
1½"	1¼"	inch	1.25	10.31	7.05	12.01	15.12	3.74	14.06	15.69	11.97	16.73	8.09	9.72	6	10.76	15.75	5.51	0.55	0.55		0.31		2.76		80
DN50	DN40	mm	38.15	255.8	195	368	451	95	376.5	418.1	304	443.75	224.9	266.5	152.4	292.15	400	172	13.9	13.9	M20X2.5	15.75	(F07)	70	M8X10	102
2"	1½"	inch	1.5	10.07	7.68	14.49	17.76	3.74	14.82	16.46	11.97	17.47	8.85	10.49	6	11.5	15.75	6.77	0.55	0.55		0.62		2.76		118
DN65	DN50	mm	51	313	225	419	508	105	392.4	438.9	304.8	479.4	240	286.5	152.4	327	610	199	18.9	15.9	1"-14 UNS-2A	16.7	(F10)	102	M10X15	208
2½"	2"	inch	2.01	12.32	8.86	16.5	20	4.13	15.45	17.28	12	18.87	9.45	11.28	6	12.87	24.02	7.83	0.74	0.63		0.66		4.02		241
DN80	DN65	mm	63.75	343.2	-	470	578	140	421	490.1	304	-	269.4	338.5	152.4	-	-	268	28.45	23.75	1-½" UNF-2A	26.2	(F12)	125	M16X25	300
3"	2½"	inch	2.51	13.51	-	18.5	22.76	5.51	16.57	19.3	11.97	-	10.61	13.33	6	-	-	10.55	1.12	0.94		1.03		4.92		348
DN100	DN80	mm	82.8	419.2	-	546	673	140	438	550.65	304	-	286.4	399.05	152.4	-	-	298	28.45	23.75	1-½" UNF-2A	26.2	(F12)	125	M16X25	615
4"	3"	inch	3.26	16.5	-	21.5	26.5	5.51	17.24	21.68	11.97	-	11.28	15.71	6	-	-	11.73	1.12	0.94		1.03		4.92		713
DN150	DN100	mm	100	510	-	705	914	175	451	563.65	304	-	299.4	412.05	152.4	-	-	339	35.9	35.9	2" UNF-2A	40	(F16)	165	M20X25	872
6"	4"	inch	3.94	20.08	-	27.76	35.98	6.89	17.76	22.19	11.97	-	11.79	16.22	6	-	-	13.35	1.41	1.41		1.57		6.5		1012
DN200	DN150	mm	144.4	680	-	832	1022	210	496	637	304	-	344.4	485.4	152.4	-	-	423	45.9	45.9	2-¾" UN-2A	40	(F16)	165	M20X25	1552
8"	6"	inch	5.69	26.77	-	32.76	40.24	8.27	19.53	25.08	11.97	-	13.56	19.11	6	-	-	16.65	1.81	1.81		1.57		6.5		1800

Components & materials

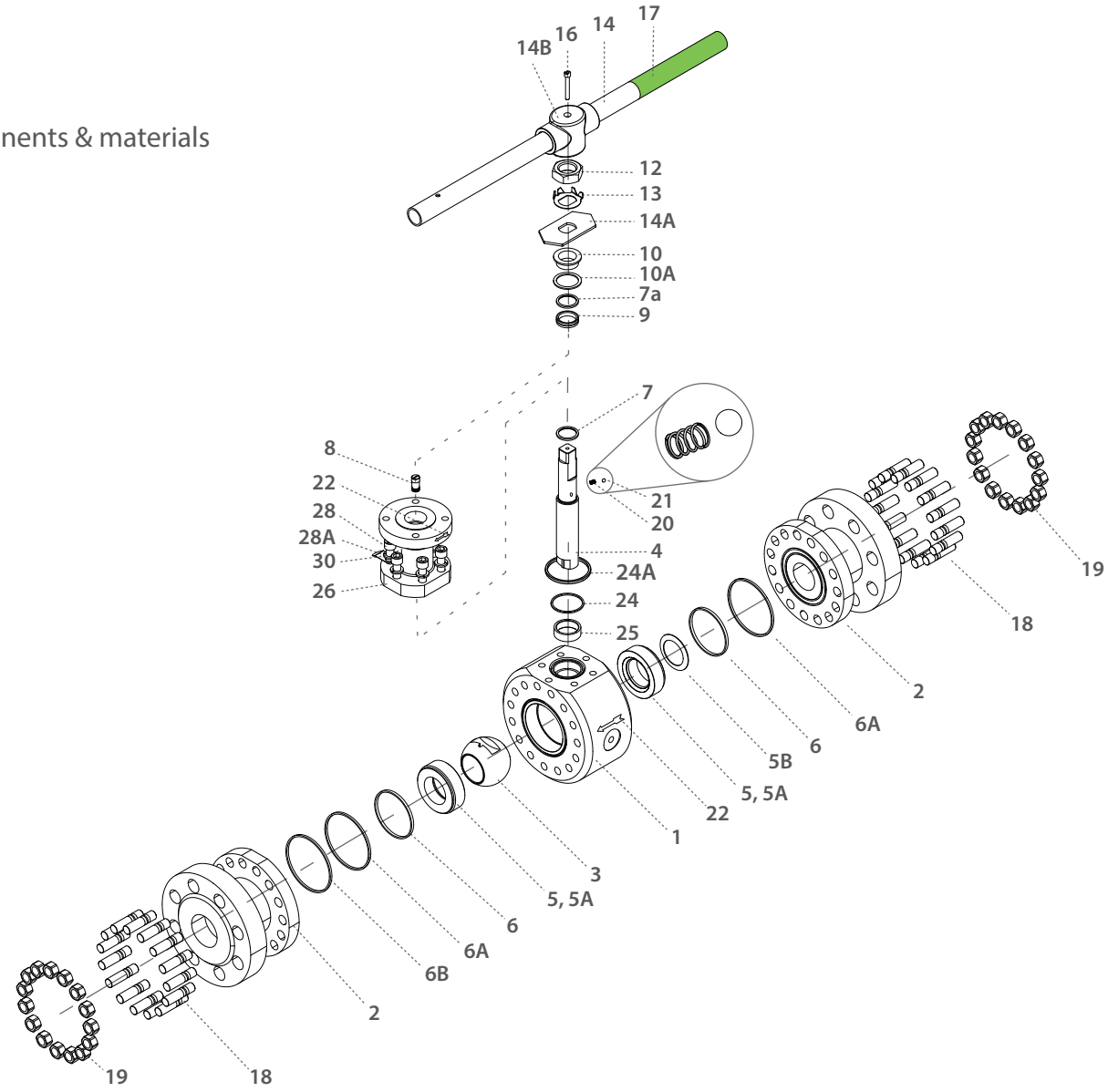

Item	Description	Material specifications	Qty.
1	Body	Acc. Ordering Code	1
2	End	Acc. Ordering Code	2
3	Ball	Acc. Ordering Code	1
4	Stem	Acc. Ordering Code	1
5*	Seat	Acc. Ordering Code	2
5A*	Seat housing	S. Steel	2
5B(1)	Upstream seat spring	Inconel 718	1
6*	Inner seal	Graphite, TFM	2
6A*	Outer seal	Acc. Ordering Code	2
6B*	Graphite string	Graphite	1
7*	Stem thrust seal	PCTFE	1
7a*	Anti-abrasion ring	PCTFE	1
8	Stop pin	S. Steel	1
9*	Stem seal	TFM	1
10	Follower	S. Steel	1
10A	Slide bearing	S. Steel	1
11	Disc spring	S. Steel	2
12	Stem nut	S. Steel	1
13	Tab lock washer	S. Steel	1
14**	Handle	S. Steel	1

Item	Description	Material specifications	Qty.
14A	Stop plate	S. Steel	1
14B	Wrench head	S. Steel	1
16	Wrench bolt	S. Steel	1
17	Sleeve	PVC	1
18	Body bolt	S. Steel	8-16
18A	Spring washer	S. Steel	8-16
19	Body bolt	S. Steel	8-16
20	Anti-static spring	S. Steel	2
21	Anti-static plunger	S. Steel	2
22	Arrow flow	S. Steel	2
23	Tag (not shown)	S. Steel	1
24*	Bonnet inner seal	Graphite, TFM	1
24A*	Bonnet outer seal	Acc. Ordering Code	1
25*	Stem bearing	PTFE	1
26	Bonnet	S. Steel	1
28	Bolt	S. Steel	6-8
30	Dog tag	S. Steel	1

* Repair kit components

** Gear operator should be used for size 3" DN80 (handle components are not included)

C28

Cryogenic High Pressure Floating Ball 3 Piece - Ordering Code System

"Mandatory option" options are marked with green background | "Standard offer" options are marked with light green background

1	2	3	4	5	6	7	8	9	10	11	12	13	14	15	16	17	18	19	20	21	22	23	24	.	.	30
6	0			F	C	2	8	W	-	6	6	M	M	F	A	G	/	B	W			-				
Size		Features				Series		Design		Body/End material		Ball/End material		Seat material		Inner Seal		Outer Seal		End connection			Special features			

Size (1-2)		
Code	inch	mm
02	¼"	8
03	⅜"	10
05	½"	15
07	¾"	20
10	1"	25
12	1¼"	32
15	1½"	40
20	2"	50
25	2½"	65
30	3"	80
40	4"	100
60	6"	150
80	8"	200

Features (3-6)	
F	Fire safe
C	Cryogenic
B	Full port
N	Control

Series (7-8)	
28	HP Float 3 pcs.

Design (9)	
W	Total HermetiX Integrity package

Body material (11)	
6	S. Steel 316/316L

End material (12)	
6	S. Steel 316/316L

Ball material (13)	
M	High Strength S. Steel

Stem material (14)	
M	High Strength S. Steel

Seat material (15)	
F	Hybrid Seat (info in special features)

Inner Seal Material (16)	
A	TFM
G	Expanded graphite

Outer Seal Material (17)	
G	Expanded graphite
A	TFM

End connections (19-22)	
Welded	
XBW80	Extended buttweld schd. 80
XBW160 *	Extended buttweld schd. 160
XBW	Extended buttweld schd. 40
XXS	Extended buttweld schd. XXS
XSW	Extended socket weld

* Std. port only

Threaded	
NPT	ASME B1.20.1 - National Pipe Taper thread
BSPT	EN 10226-2 - British Standard Pipe Taper thread
BSPP	ISO228-1, DIN3852 - Pipe parallel thread
DIN3852	DIN3852 EN 10226-1 - Pipe parallel thread
AS5202	SAE internal straight thread
Flanged	
600	ASME B16.5 #600 RF
900	ASME B16.5 #900 RF
1500	ASME B16.5 #1500 RF
2500	ASME B16.5 #2500 RF
PN100	EN1092 PN100 RF
PN160	EN1092 PN160 RF
PN250	EN 1092-1 PN250 RF
PN400	EN 1092-1 PN400 RF
Flanged RTJ	
600RTJ	ASME B16.5 #600 RTJ
900RTJ	ASME B16.5 #900 RTJ
1500RTJ	ASME B16.5 #1500 RTJ
2500RTJ	ASME B16.5 #2500 RTJ
Clamp	
GR	"Grayloc© compatible hub (Grayloc© is a registered trademark of Grayloc Products, L.L.C.)"

Hybrid Seats (24-27)							
24		25		26		27	
Insert material		"Upstream/ Downstream"		Insert Shape		Seal Type	
C	PCTFE	0	Hybrid seats on upstream and downstream, spring loaded	0	Scraper	5	Seal 1: TFM; Seal 2: Expanded graphite
						6	Seal 1: TFM

Special Features (24-30)	
Vxx	V port
VBxx	Characterized control ball
6.0	Short bonnet

DC47 C61 C62

Cryogenic Valves

FLOATING BALL

DIVERTER MULTIPORT

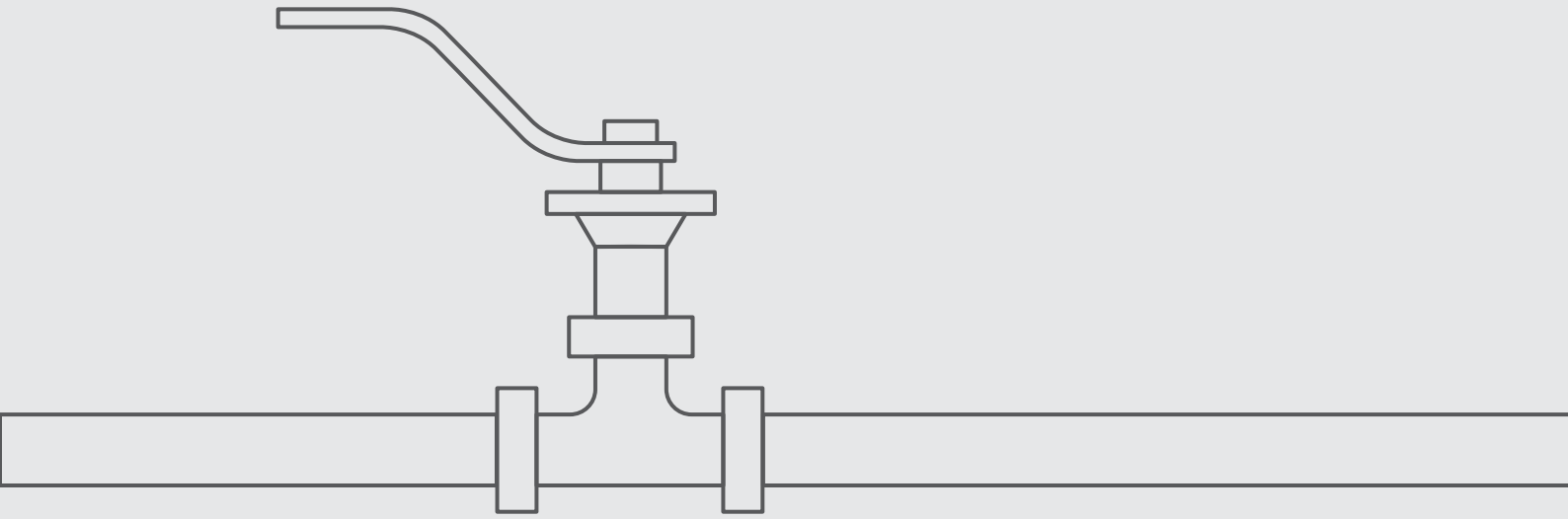

DC47 ½"-2" | DN15-DN50 | CLASS 600

Cryogenic Diverter Bottom Entry Floating Ball

Valve dimensions

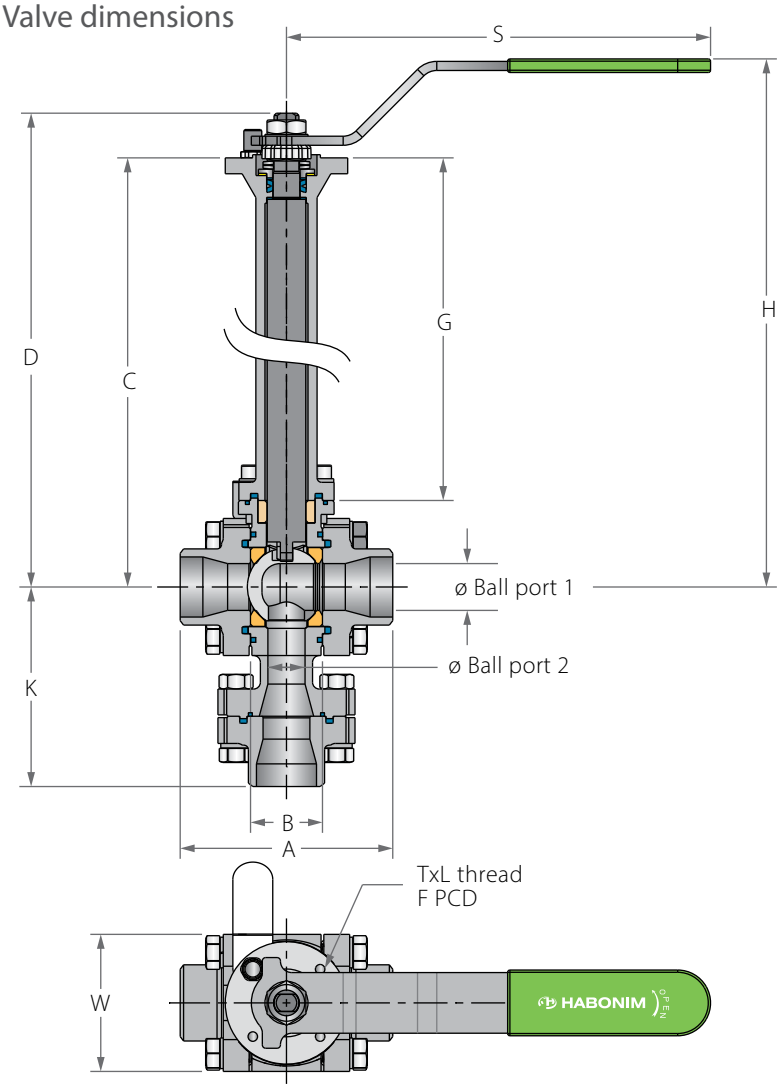

Preparation for actuation

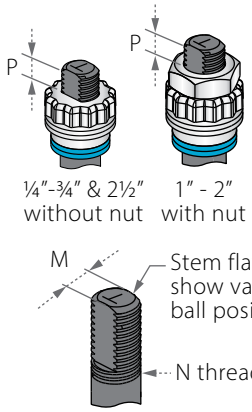

Std. port	Full Port	Unit	Ball port1	Ball port2	A	B	Standard design				6.0" bonnet				K	S	W	M	N	P	F		TxL	Weight kg/lb	
							C	D	G	H	C	D	G	H										Std.	6.0 Bonnet
DN15	DN10	mm	10.5	9.5	65.8	20.6	333	341.9	304	367.3	181.4	190.3	152.4	215.7	88.2	150	45.8	5.5	3/8" UNF	7.2	(F03)	36	M5X7	1.79	1.47
½"	3/8"	inch	0.41	0.37	2.59	0.81	13.11	13.46	11.97	14.46	7.14	7.49	6	8.49	3.47	5.91	1.8	0.22		0.28		1.42		3.93	3.23
DN20	DN15	mm	14.3	11.9	70.55	24.55	335.4	344.3	304	369.6	183.8	192.7	152.4	218	93.7	150	52.1	5.5	3/8" UNF	7.2	(F03)	36	M5X7	1.52	1.20
¾"	½"	inch	0.56	0.47	2.78	0.97	13.2	13.56	11.97	14.55	7.24	7.59	6	8.58	3.69	5.91	2.05	0.22		0.28		1.42		3.35	2.64
DN25	DN20	mm	20.65	15.9	93.75	31.75	342.15	359.65	304	387	190.55	208.05	152.4	235.4	119	187	60.45	7.54	7/16" UNF	7.2	(F04)	42	M5X7	3.19	2.84
1"	¾"	inch	0.81	0.63	3.69	1.25	13.47	14.16	11.97	15.24	7.5	8.19	6	9.27	4.69	7.32	2.38	0.3		0.28		1.65		7.02	6.25
DN32	DN25	mm	25.4	20.5	108	41.25	346.65	364.15	304	388	195.05	212.55	152.4	236.4	130.15	187	68.8	7.54	7/16" UNF	7.2	(F04)	42	M5X7	4.21	3.75
1¼"	1"	inch	1	0.81	4.25	1.62	13.65	14.34	11.97	15.28	7.68	8.37	6	9.31	5.12	7.36	2.71	0.3		0.28		1.65		9.25	8.24
DN40	DN32	mm	26.6	31.8	115.35	48.35	347.55	377.05	304	404	195.95	225.45	152.4	252.4	139	237	79.15	8.71	9/16" UNF	8	(F05)	50	M6X8	5.22	4.65
1½"	1¼"	inch	1.05	1.25	4.54	1.90	13.68	14.84	11.97	15.91	7.71	8.88	6	9.94	5.47	9.29	3.12	0.34		0.31		1.97		11.51	10.25
DN50	DN40	mm	38.15	35	127.9	56.3	352.25	381.75	304	409	200.65	230.15	152.4	257.4	149.45	237	90.7	8.71	9/16" UNF	8.5	(F05)	50	M6X8	6.68	6.11
2"	1½"	inch	1.50	1.38	5.04	2.22	13.87	15.03	11.97	16.1	7.90	9.06	6	10.13	5.88	9.29	3.57	0.34		0.33		1.97		14.72	13.47

Cryogenic Diverter Bottom Entry Floating Ball

Components & materials

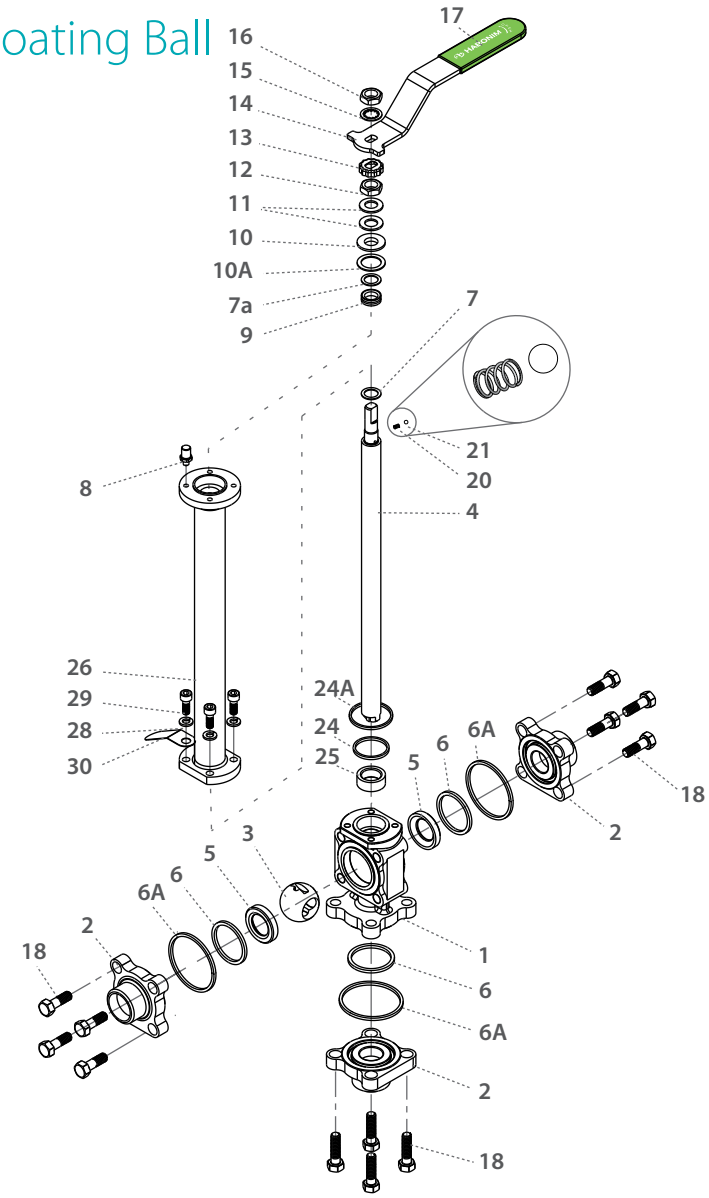

Item	Description	Material specifications	Qty.
1	Body	Acc. Ordering Code	1
2	End	Acc. Ordering Code	3
3	Ball	Acc. Ordering Code	1
4	Stem	Acc. Ordering Code	1
5*	Seat	Acc. Ordering Code	2
6*	Body seal	TFM	3
6A*	Secondery Seal	Graphite, TFM	2
7*	Stem thrust seal	PCTFE	1
7a*	Anti-abrasion ring	PCTFE	1
8	Stop pin	S. Steel	1
9*	Stem seal	TFM	1
10	Follower	S. Steel	1
10A	Slide bearing	S. Steel	1
11	Disc spring	S. Steel	2
12	Stem nut	S. Steel	1
13	Locking clip	S. Steel	1
14	Handle	S. Steel	1

Item	Description	Material specifications	Qty.
15	Serrated washer	S. Steel	1
16	Handle nut	S. Steel	1
17	Sleeve	PVC	1
18	Body bolt	S. Steel	12
20	Anti-static spring	S. Steel	1
21	Anti-static plunger	S. Steel	1
23	Tag (not shown)	S. Steel	1
24*	Bonnet seal	TFM	1
24A*	Bonnet Secondery Seal	Acc. Ordering Code	1
25*	Stem bearing	PTFE	1
26	Bonnet	S. Steel	1
28	Bolt	S. Steel	12
30	Dog tag	S. Steel	1
26	Bonnet	S. Steel	1
28	Bolt	S. Steel	4
30	Dog tag	S. Steel	1

* Repair kit components

C61 C62 ½"-1½" | DN15-DN40 | CLASS 600

Cryogenic Multiport Floating Ball

Valve dimensions

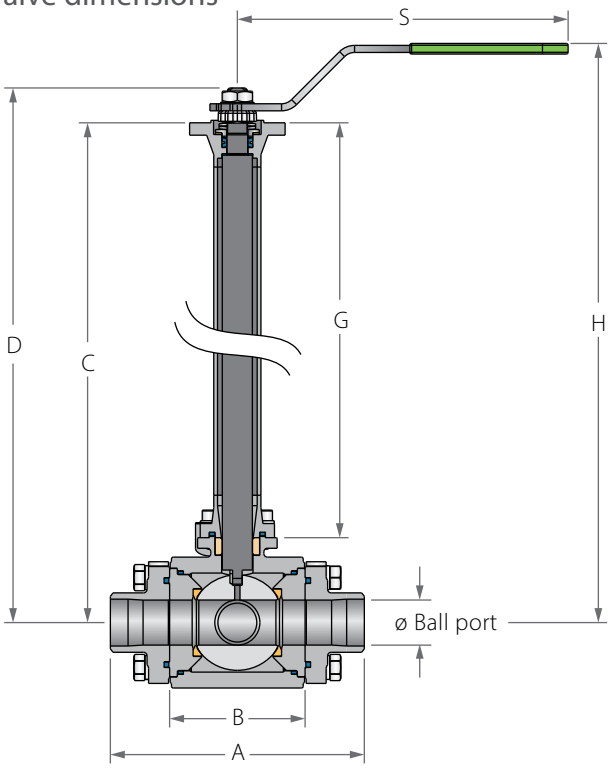

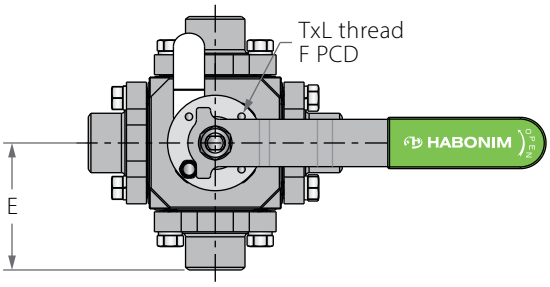

Preparation for actuation

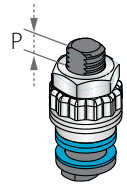

½" - 1½"
with nut

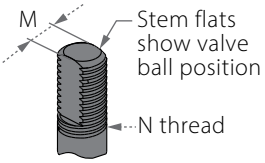

Std. port	Full port	Unit	Ball port	A	B	Standard design					6.0" bonnet				E	S	M	N	P	F		TxL	Weight kg/lb	
						C	D	E	G	H	C	D	G	H									Std.	6.0 Bonnet
DN20	DN15	mm	14.3	108	62	341	358.5	304	384.9	189.4	206.9	152.4	233.3	224.52	54.3	187	7.5	7/16" UNF	7.2	(F04)	42	M5X7	3.65	3.33
¾"	½"	inch	0.56	4.25	2.44	13.43	14.11	11.97	15.15	7.46	8.15	6	9.19	8.84	2.14	7.36	0.3		0.28		1.65		8.04	7.34
DN25	DN20	mm	20.7	134.6	71.6	347	364.5	304	389.8	195.4	212.9	152.4	238.2	239.43	66.8	187	7.5	7/16" UNF	7.2	(F04)	42	M5X7	5.25	4.9
1"	¾"	inch	0.81	5.30	2.82	13.66	14.35	11.97	15.35	7.69	8.38	6	9.38	9.43	2.63	7.36	0.3		0.28		1.65		11.57	10.8
DN32	DN25	mm	25.5	143	76	352	369.5	304	396.9	200.4	217.9	152.4	245.3	244.43	71.8	187	7.5	7/16" UNF	8.5	(F04)	42	M5X7	7.42	6.85
1¼"	1"	inch	1	5.63	2.99	13.86	14.55	11.97	15.63	7.89	8.58	6	9.66	9.62	2.83	7.36	0.3		0.33		1.65		16.35	15.1
DN40	DN32	mm	31.65	158	91	353.4	382.9	304	408.1	201.8	231.3	152.4	256.5	257.13	79	237	8.71	9/16" UNF	8.5	(F05)	50	M6X8	9.12	8.55
1½"	1¼"	inch	1.25	6.22	3.58	13.91	15.07	11.97	16.07	7.94	9.11	6	10.1	10.12	3.11	9.33	0.34		0.33		1.97		20.1	18.84

Cryogenic Multiport Floating Ball

Components & materials

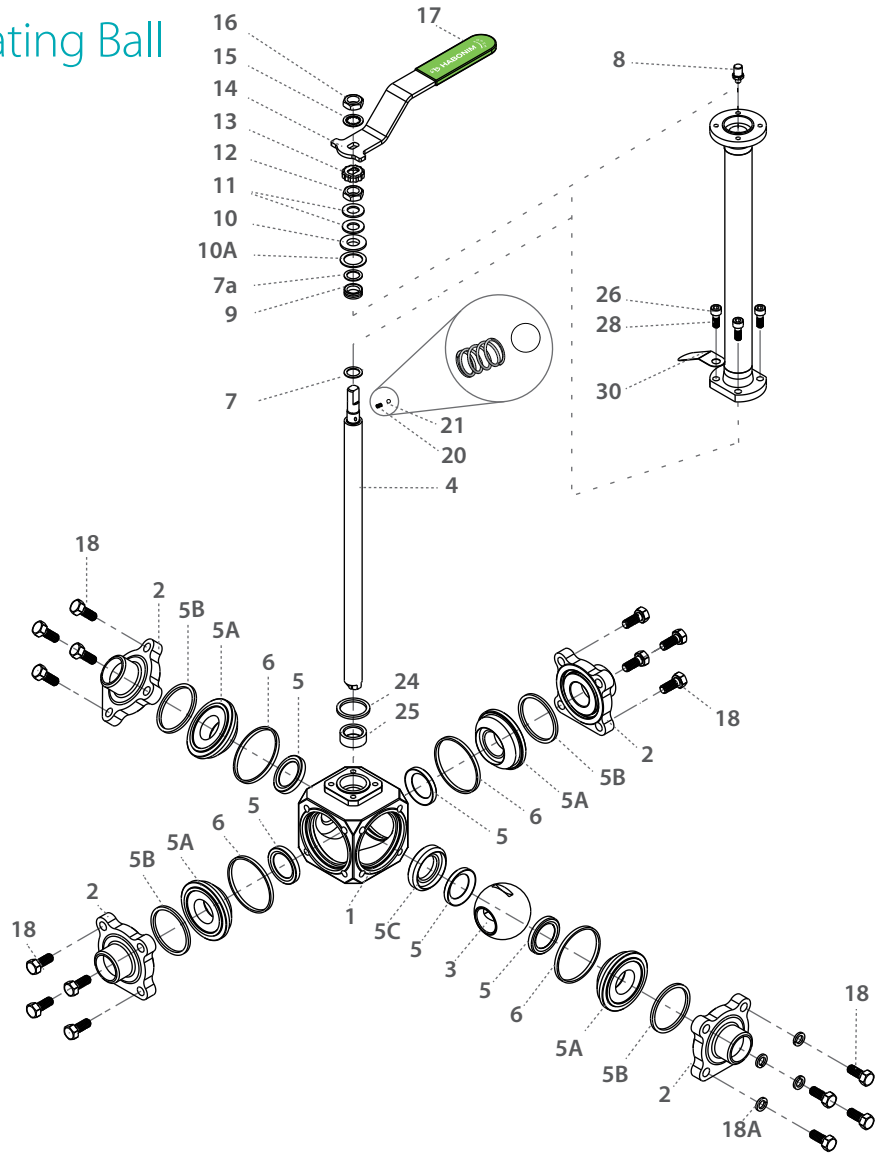

Item	Description	Material specifications	Qty.
1	Body	Acc. Ordering Code	1
2	End	Acc. Ordering Code	3/4**
3	Ball	Acc. Ordering Code	1
4	Stem	Acc. Ordering Code	1
5*	Seat	Acc. Ordering Code	4/5**
5A	Seat housing	S. Steel	3/4**
5B*	Seat seal	PTFE, Graphite	3/4**
5C	Seat support	A479 316/316L, B574 N06022, Bronze RG5	1
6*	Body seal	PTFE, Graphite	3/4**
7*	Stem thrust seal	PCTFE	1
7a*	Anti-abrasion ring	PCTFE	1
8	Stop pin	S. Steel	1
9*	Stem seal	TFM	1
10	Follower	S. Steel	1
10A	Slide bearing	S. Steel	1
11	Disc spring	S. Steel	2
12	Stem nut	S. Steel	1

Item	Description	Material specifications	Qty.
13	Locking clip	S. Steel	1
14	Handle	S. Steel	1
15	Serrated washer	S. Steel	1
16	Handle nut	S. Steel	1
17	Sleeve	PVC	1
18	Body bolt	S. Steel	12/16**
20	Anti-static spring	S. Steel	1
21	Anti-static plunger	S. Steel	1
23	Tag (not shown)	S. Steel	1
24*	Bonnet seal	PTFE, Graphite	1
25*	Stem bearing	PTFE	1
26	Bonnet	S. Steel	1
28	Bolt	S. Steel	4
30	Dog tag	S. Steel	1

* Repair kit components

** 61 is Multiport with three horizontal ports, 62 is Multiport with four horizontal ports

C61 C62 2"-4" | DN50-DN100 | CLASS 300

Cryogenic Floating Ball Multiport

Valve dimensions

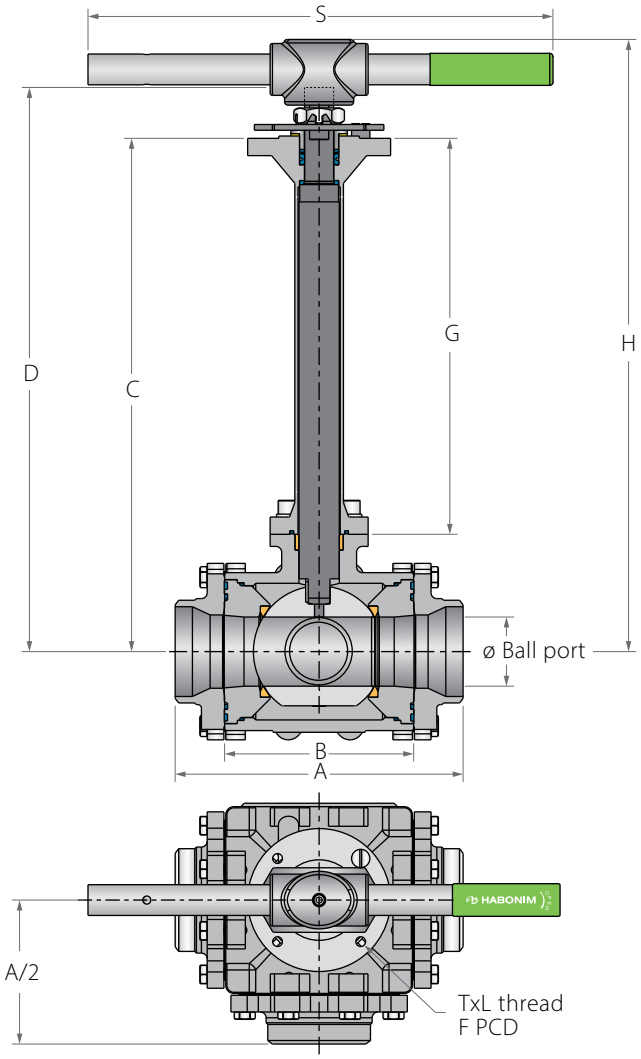

Preparation for actuation

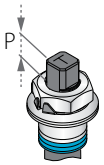

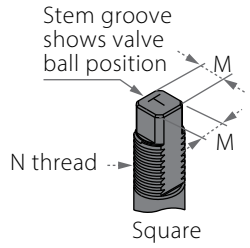

Std. port	Full port	Unit	Ball port	A	B	Standard design					6.0" bonnet				S	M	M DD	N	P	F		TxL	Weight kg/lb	
						C	D	E	G	H	C	D	G	H									Std.	6.0 Bonnet
DN50	DN40	mm	38.1	178.8	107.2	397.1	438.7	327.5	465.9	222	263.6	152.4	290.8	224.52	400	13.9	13.9	M20X2.5	14.36	(F07)	70	M8X8	24.7	23.25
2"	1½"	inch	1.5	7.04	4.22	15.63	17.27	12.89	18.34	8.74	10.38	6	11.45	8.84	15.75	0.55	0.55		0.57		2.76		54.44	51.24
DN65	DN50	mm	48	210	125	406.6	453.1	327.5	480.3	231.5	278	152.4	305.2	239.43	400	18.9	15.9	1"-14 UNS-2A	16.7	(F10)	102	M10X15	24.7	23.25
2½"	2"	inch	1.89	8.27	4.92	16.01	17.84	12.89	18.91	9.11	10.94	6	12.02	9.43	15.75	0.74	0.63		0.66		4.02		54.44	51.24
DN80	DN65	mm	60	249.8	164	486.75	555.85	385	-	254.15	323.25	152.4	-	244.43	-	28.45	23.75	1-½"-12 UNF-2A	26.2	(F12)	125	M12X15	42.4	41.2
3"	2½"	inch	2.36	9.83	6.46	19.16	21.88	15.16	-	10.01	12.73	6	-	9.62	-	1.12	0.94		1.03		4.92		93.45	90.8
DN100	DN80	mm	76	309.8	205	519.5	588.6	385	-	286.9	356	152.4	-	257.13	-	28.45	23.75	1-½"-12 UNF-2A	26.2	(F12)	125	M12X15	66.4	65.2
4"	3"	inch	2.99	12.2	8.07	20.45	23.17	15.16	-	11.3	14.02	6	-	10.12	-	1.12	0.94		1.03		4.92		146.35	143.7

Cryogenic Floating Ball Multiport

Components & materials

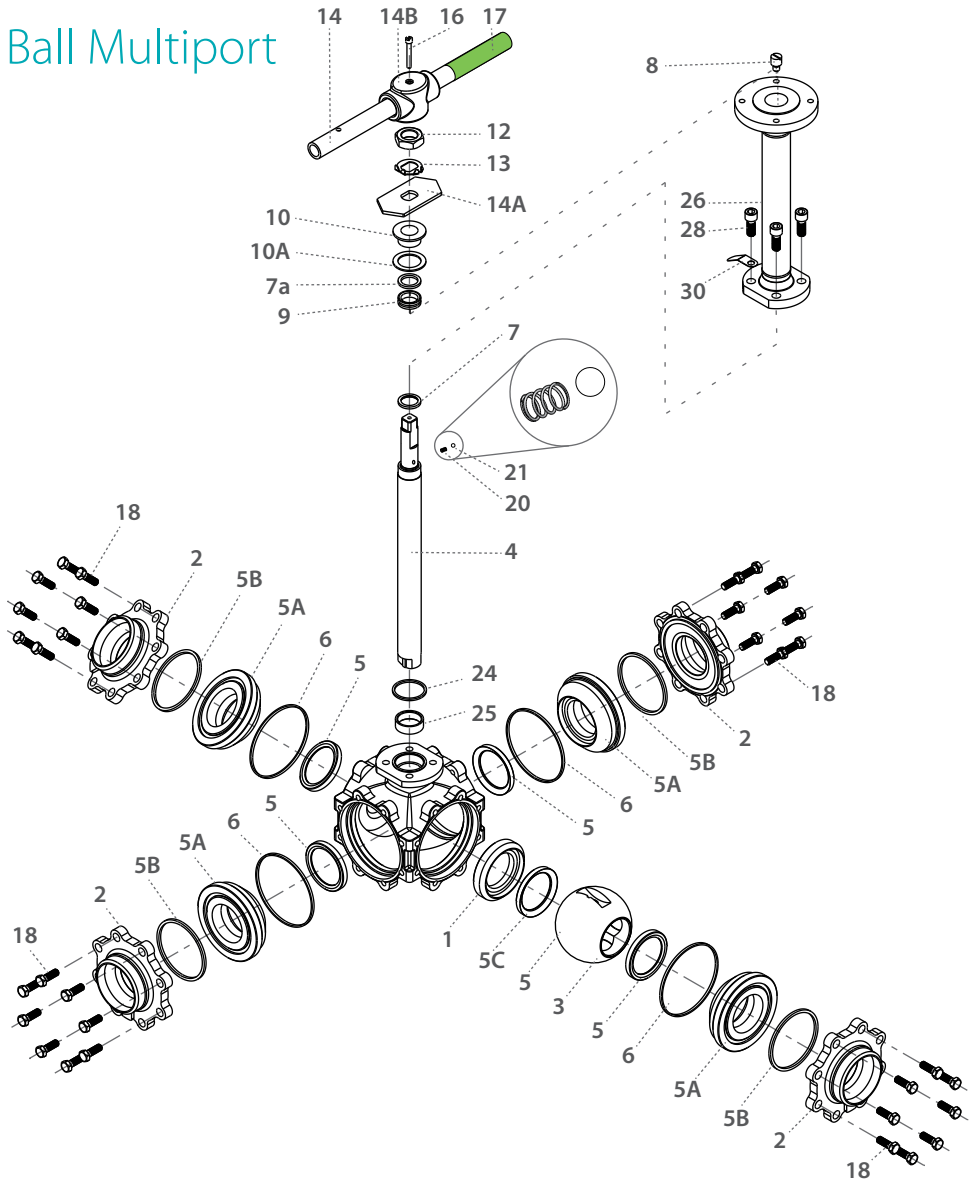

Item	Description	Material specifications	Qty.
1	Body	Acc. Ordering Code	1
2	End	Acc. Ordering Code	3
3	Ball	Acc. Ordering Code	1
4	Stem	Acc. Ordering Code	1
5*	Seat	Acc. Ordering Code	4
5A	Seat housing	S. Steel	3
5B*	Seat seal	PTFE, Graphite	3
5C	Seat support	A479 316/316L, B574 N06022, Bronze RG5	1
6*	Body seal	PTFE, Graphite	3
7*	Stem thrust seal	PCTFE	1
7a*	Anti-abrasion ring	PCTFE	1
8	Stop pin	S. Steel	1
9*	Stem seal	TFM	1
10	Follower	S. Steel	1
10A	Slide bearing	S. Steel	1
11	Disc spring	S. Steel	2

Item	Description	Material specifications	Qty.
12	Stem nut	S. Steel	1
13	Tab lock washer	S. Steel	1
14**	Handle	S. Steel	1
14A	Stop plate	S. Steel	1
14B	Wrench head	S. Steel	1
16	Wrench bolt	S. Steel	1
17	Sleeve	PVC	1
18	Body bolt	S. Steel	12-24
18A	Spring washer	S. Steel	12-24
20	Anti-static spring	S. Steel	2
21	Anti-static plunger	S. Steel	2
23	Tag (not shown)	S. Steel	1
24*	Bonnet seal	PTFE, Graphite	1
25*	Stem bearing	PTFE	1
26	Bonnet	S. Steel	1
28	Bolt	S. Steel	4
30	Dog tag	S. Steel	1

* Repair kit components

** Gear operator should be used for size 3" DN80 and above (handle components are not included)

C61 C62

Cryogenic Floating Ball Multiport - Ordering Code System

"Mandatory option" options are marked with green background | "Standard offer" options are marked with light green background

1	2	3	4	5	6	7	8	9	10	11	12	13	14	15	16	17	18	19	20	21	22	23	24	.	.	30
6	0		F	D	C	6	1	W	-	6	6	6	M	A	A	G	/	B	W			-				
Size		Features				Series(1)		Design		Body material	Ends material	Ball material	Stem material	Seat material	Inner Seal	Outer Seal		End connection					Special features			

Size (1-2)		
Code	inch	mm
05 *	½"	15
07	¾"	20
10	1"	25
12	1¼"	32
15	1½"	40
20	2"	50
25	2½"	65
30	3"	80
40	4"	100

* Full port only

Features (3-6)	
F	Fire safe
C	Cryogenic design
B	Full port
D	Diverter

Series (7-8)	
61	
62	

Design (9)	
W	"Total HermetiX Integrity package"

Body material (11)	
6	S. Steel

End material (12)	
6	S. Steel

Ball material (13)	
6	S. St. 316L

Stem material (14)	
M	High Strength S. Steel
6	S. Steel
Z	Inconel

Seat material (15)	
A	TFM
C	PCTFE
P	CF PTFE

Inner Seal Material (16)	
A	TFM
G	Expanded graphite

Outer Seal Material (17)	
G	Expanded graphite
A	TFM

End connections	
Welded	
BW10	Buttweld schd. 10
BW	Buttweld schd. 40
XBW10	Extended buttweld schd. 10
XBW	Extended buttweld schd. 40
BW5	Buttweld schd. 5
BW80	Buttweld schd. 80
BWO *	Buttweld tube OD
BWD	Buttweld DIN 11860
BWI	buttweld ISO
SW	Socket weld
SWO *	Socket weld tube OD
XBW80	Extended Buttweal 80
XSW	Extended socket weld
ETO *	Extended tube OD
ETI	Extended buttweld ISO
ETD	Extended buttweld DIN

* Std. port only

Threaded	
NPT	ASME B1.20.1 - National Pipe Taper thread
MNPT	Male NPT
BSPT	EN 10226 - Pipe Taper thread
MBSPT	Male BSPT
BSPP	ISO228-1, DIN3852 - Pipe parallel thread
DIN3852	DIN3852 - Pipe Parallel thread
AS5202	SAE internal straight thread
Flanged	
150	ASME B16.5 #150 RF
300	ASME B16.5 #300 RF
600	ASME B16.5 #600 RF
900	ASME B16.5 #900 RF
PN16	EN1092 PN16 RF
PN40	EN1092 PN40 RF
PN64	EN1092 PN64 RF
PN100	EN1092 PN100 RF
PN160	EN1092 PN160 RF
Clamp	
LL *	Compression fitting (Imperial)
LM *	Compression fitting (metric)
TC *	Tri-Clamp
GR	"Grayloc© compatible hub (Grayloc© is a registered trademark of Grayloc Products, L.L.C.)"

* Std. port only

Remarks

(1) The cryogenic series is cleaned for O2 service as standard, no need for extra prefix.

As standard all Habonim cryogenic valves come with an anti-static device.

In some applications the available options above are limited to specific sizes please consult with Habonim for details.

C31 C32 C73 C74 C77 C78

Cryogenic Valves

FLOATING BALL

FLANGED

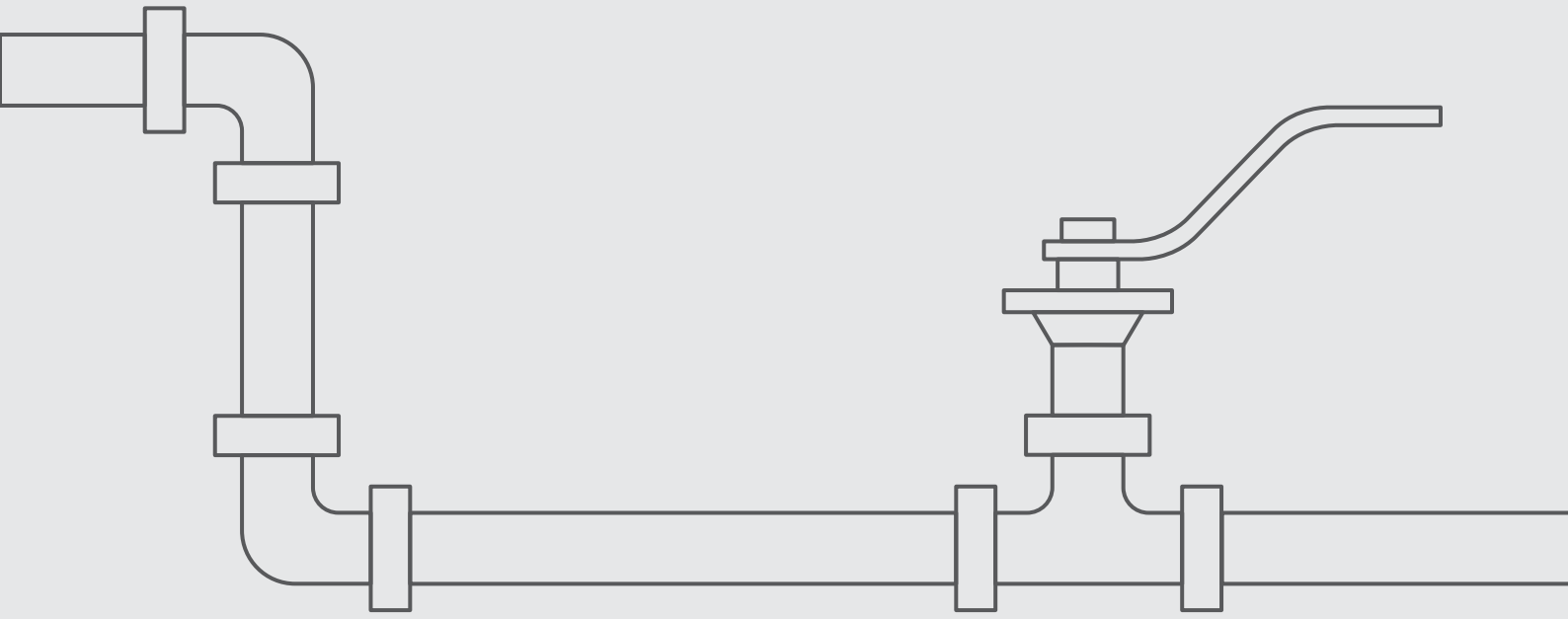

C31 C32 ½"-2" | DN15-DN50 | CLASS 150/300

Cryogenic Flanged Reduced Port Floating Ball

Valve dimensions

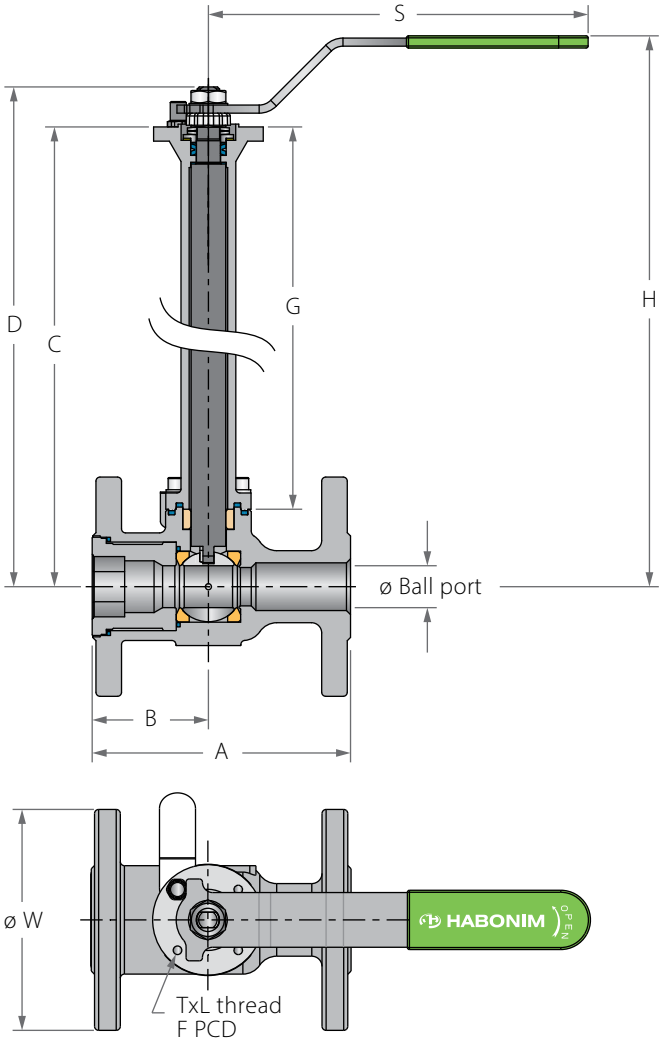

Preparation for actuation

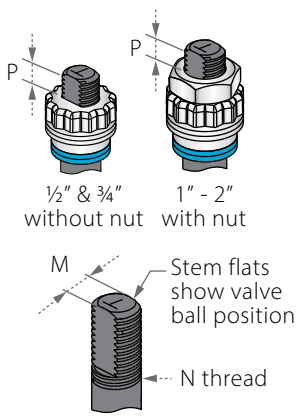

Std. port	Unit	Ball port	A_31	A_32	B	Standard design				6.0" bonnet				S	W	M	N	P	F		TxL	Weight kg/lb		Kv
						C	D	G	H	C	D	G	H									Std.	6.0"	Cv
DN15	mm	11.15	108	140	46	333	341.9	304	367	181.4	190.3	152.4	215.4	150	89	5.5		7.2	(F03)	36		2.4	2.1	7
½"	inch	0.44	4.25	5.51	1.81	13.11	13.46	11.97	14.45	7.14	7.49	6	8.48	5.91	3.5	0.22	⅜" UNF	0.28		1.42	M5X7	5.3	4.6	8
DN20	mm	14.30	117	152.4	49.35	335.4	344.3	304	369.4	183.8	192.7	152.4	217.8	150	98	5.5		7.2	(F03)	36		3	2.7	10
¾"	inch	0.56	4.61	6	1.94	13.2	13.56	11.97	14.54	7.24	7.59	6	8.57	5.91	3.86	0.22	⅜" UNF	0.28		1.42	M5X7	6.6	5.9	12
DN25	mm	20.60	127	165	57	342.15	359.65	304	387	190.55	208.05	152.4	235.4	187	108	7.54		7.2	(F04)	42		4.2	3.85	27
1"	inch	0.81	5	6.5	2.24	13.47	14.16	11.97	15.24	7.5	8.19	6	9.27	7.36	4.25	0.3	7⁄16" UNF	0.28		1.65	M5X7	9.3	8.5	32
DN40	mm	31.80	165	190.5	62.4	347.55	377.05	304	404	195.95	225.45	152.4	252.4	237	127	8.71		8	(F05)	50		7	6.43	70
1½"	inch	1.25	6.5	7.5	2.46	13.68	14.84	11.97	15.91	7.71	8.88	6	9.94	9.33	5	0.34	9⁄16" UNF	0.31		1.97	M6X8	15.4	14.2	82
DN50	mm	38.10	178	216	68	352.25	381.75	304	406	200.65	230.15	152.4	254.4	237	152	8.71		8.5	(F05)	50		9.1	8.53	103
2"	inch	1.50	7.01	8.5	2.68	13.87	15.03	11.97	15.98	7.9	9.06	6	10.02	9.33	5.98	0.34	9⁄16" UNF	0.33		1.97	M6X8	20.1	18.8	120

Cryogenic Flanged Reduced Port Floating Ball

Components & materials

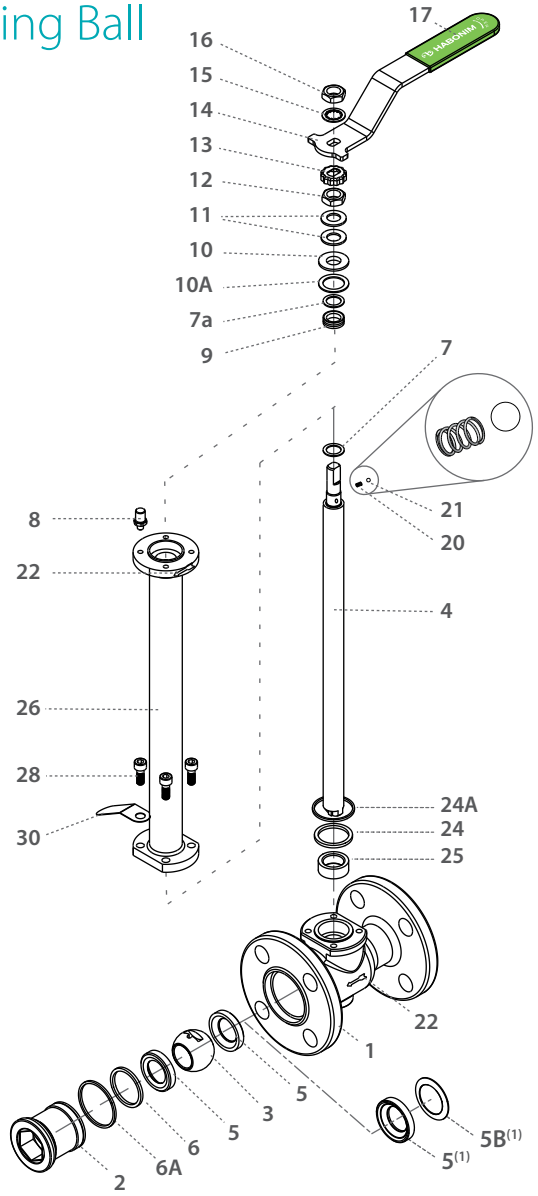

Item	Description	Material specifications	Qty.
1	Body	Acc. Ordering Code	1
2	Plug	Acc. Ordering Code	1
3	Ball	Acc. Ordering Code	1
4	Stem	Acc. Ordering Code	1
5*	Seat	Acc. Ordering Code	2
5B	Upstream seat spring	Inconel 718	1
6*	Inner seal	TFM	1
6A*	Outer seal	Acc. Ordering Code	1
7*	Stem thrust seal	PCTFE	1
7a*	Anti-abrasion ring	PCTFE	1
8	Stop pin	S. Steel	1
9*	Stem seal	TFM	1
10	Follower	S. Steel	1
10A	Slide bearing	S. Steel	1
11	Disc spring	S. Steel	2
12	Stem nut	S. Steel	1
13	Locking clip	S. Steel	1

Item	Description	Material specifications	Qty.
14	Handle	S. Steel	1
15	Serrated washer	S. Steel	1
16	Handle nut	S. Steel	1
17	Sleeve	PVC	1
20	Anti-static spring	S. Steel	1
21	Anti-static plunger	S. Steel	1
22	Arrow flow	S. Steel	2
23	Tag (not shown)	S. Steel	1
24*	Bonnet inner seal	TFM	1
24A*	Bonnet outer seal	Acc. Ordering Code	1
25*	Stem bearing	PTFE	1
26	Bonnet	S. Steel	1
28	Bolt	S. Steel	4
30	Dog tag	S. Steel	1

* Repair kit components

(1) Optional Dynemic seat design

C31 C32 3"-8" | DN80-DN200 | CLASS 150/300

Cryogenic Flanged Reduced Port Floating Ball

Valve dimensions

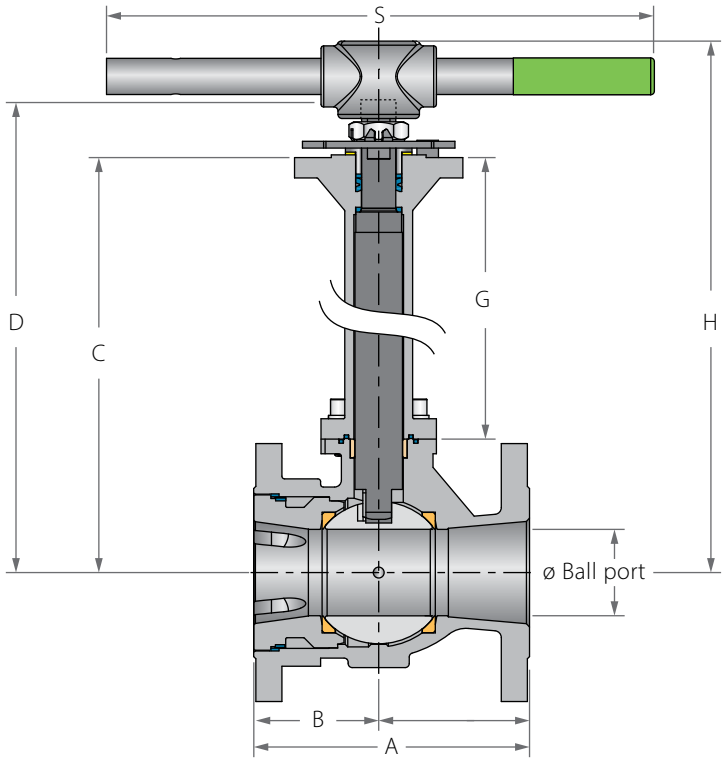

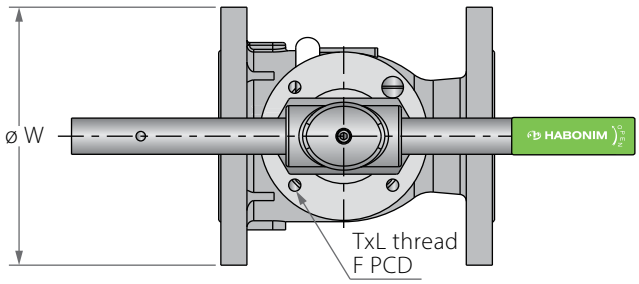

Preparation for actuation

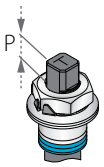

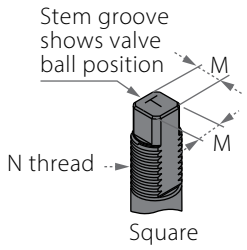

Std. port	Unit	Ball port	A_31	A_32	B	Standard design				6.0" bonnet				S	W	M	M DD	N	P	F		TxL	Weight kg/lb		Kv
						C	D	G	H	C	D	G	H										Std.	6.0"	Cv
DN80	mm	63.8	203.2	282	92.1	463.3	509.9	343.5	550.5	272.2	318.8	152.4	359.4	610	210	18.92	15.9	1"-14 UNS-2A	16.7	(F10)	102	M10X15	29	27.8	385
3"	inch	2.51	8	11.1	3.63	18.24	20.07	13.52	21.67	10.72	12.55	6	14.15	24.02	8.27	0.74	0.63		0.66		4.02		63.9	61.3	450
DN100	mm	82.8	228.6	304.8	101.6	457.6	504.2	343.5	543.4	266.5	313.1	152.4	352.3	610	254	18.92	15.9	1"-14 UNS-2A	16.7	(F10)	102	M10X15	44.6	43.4	615
4"	inch	3.26	9	12	4	18.02	19.85	13.52	21.39	10.49	12.33	6	13.87	24.02	10	0.74	0.63		0.66		4.02		98.3	95.7	720
DN150	mm	111.3	266.8	403.2	107.8	561	630.5	385	-	328.4	397.9	152.4	-	-	318	28.45	23.75	1½"-12 UNS-2A	26.2	(F12)	125	M12X15	92	89	872
6"	inch	4.38	10.5	15.87	4.24	22.09	24.82	15.16	-	12.93	15.67	6	-	-	12.52	1.12	0.94		1.03		4.92		202.4	195.8	1020
DN200	mm	144.4	292.1	419.1	142.25	570.1	639.6	385	-	337.5	407	152.4	-	-	381	28.45	23.75	1½"-12 UNS-2A	26.2	(F12)	125	M12X15	118.6	114.5	1607
8"	inch	5.69	11.5	16.5	5.6	22.44	25.18	15.16	-	13.29	16.02	6	-	-	15	1.12	0.94		1.03		4.92		261.4	252.4	1880

Cryogenic Flanged Reduced Port Floating Ball

Components & materials

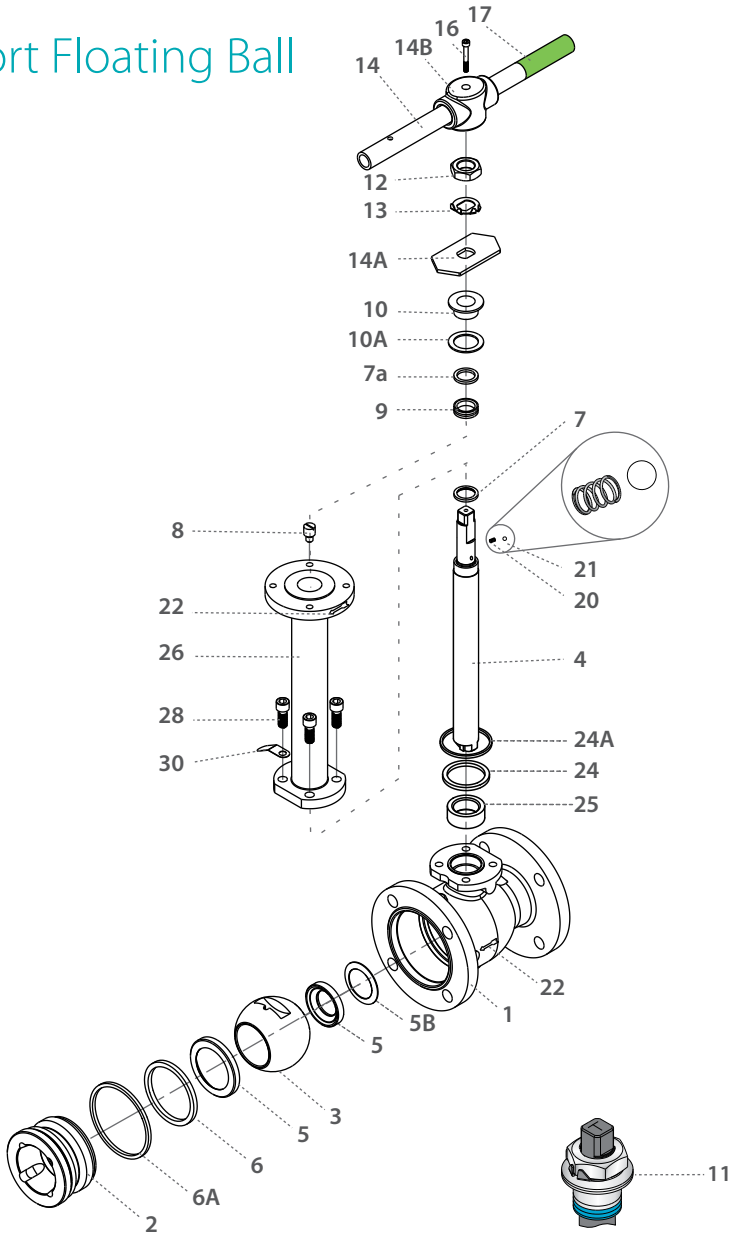

Item	Description	Material specifications	Qty.
1	Body	Acc. Ordering Code	1
2	Plug	Acc. Ordering Code	1
3	Ball	A351 CF8M, B574 N06022, Bronze RG5	1
4	Stem	Acc. Ordering Code	1
5*	Seat	Acc. Ordering Code	2
5B	Upstream seat spring	Inconel 718	1
6*	Inner seal	TFM	1
6A*	Outer seal	Acc. Ordering Code	1
7*	Stem thrust seal	PCTFE	1
7a*	Anti-abrasion ring	PCTFE	1
8	Stop pin	S. Steel	1
9*	Stem seal	TFM	1
10	Follower	S. Steel	1
10A	Slide bearing	S. Steel	1
11	Disc spring	S. Steel	2
12	Stem nut	S. Steel	1
13	Tab lock washer	S. Steel	1
14**	Handle	S. Steel	1

Item	Description	Material specifications	Qty.
14A	Stop plate	S. Steel	1
14B	Wrench head	S. Steel	1
16	Wrench bolt	S. Steel	1
17	Sleeve	PVC	1
20	Anti-static spring	S. Steel	2
21	Anti-static plunger	S. Steel	2
22	Arrow flow	S. Steel	2
23	Tag (not shown)	S. Steel	1
24*	Bonnet seal	PTFE, Graphite	1
25*	Stem bearing	PTFE	1
26	Bonnet	S. Steel	1
28	Bolt	S. Steel	4
30	Dog tag	S. Steel	1

* Repair kit components

** Gear operator should be used for size 6" DN150 and above (handle components are not included)

C73 C74 C78 ½"-1" | DN15-DN25 | CLASS 150/300/PN 40

Cryogenic Flanged Full Port Floating Ball

Valve dimensions

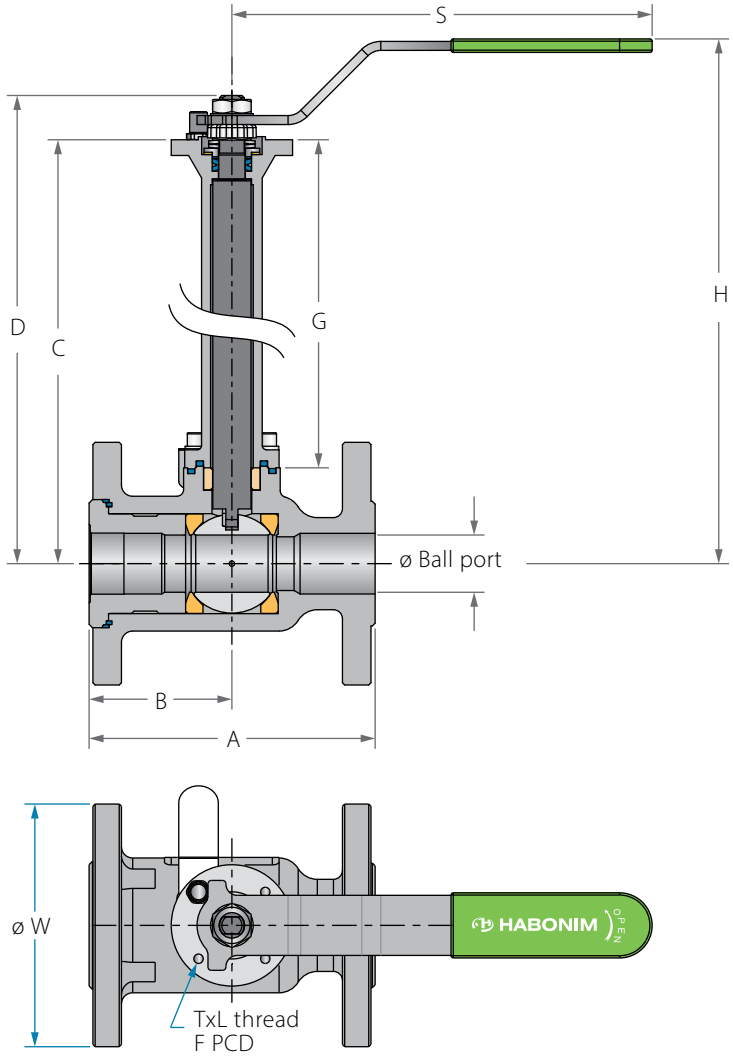

Preparation for actuation

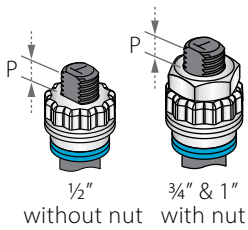

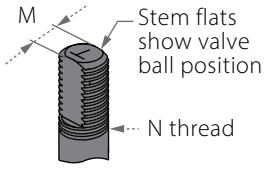

Full Port	Unit	Ball port	A_73	A_74	A_78		B	Standard design				6.0" bonnet				S	W	M	N	P	F		TxL	Weight	kg/lb	Kv
					F1	F4		C	D	G	H	C	D	G	H									Std.	6.0"	Cv
DN15	mm	14.3	108.2	140	130	115	48.2	335.4	344.3	304	400	183.8	192.7	152.4	248.4	150	89	5.5		7.2	(F03)	36		2.6	2.28	26
½"	inch	0.56	4.26	5.51	5.12	4.53	1.9	13.2	13.56	11.97	15.75	7.24	7.59	6	9.78	5.91	3.5	0.22	3/8" UNF	0.28		1.42	M5X7	5.73	5.03	30
DN20	mm	20.6	117	153	150	120	59	342.15	359.65	304	406.8	190.55	208.05	152.4	255.2	187	98	7.54		7.2	(F04)	42		3.8	3.45	43
¾"	inch	0.81	4.61	6.02	5.91	4.72	2.32	13.47	14.16	11.97	16.02	7.5	8.19	6	10.05	7.36	3.86	0.3	7/16" UNF	0.28		1.65	M5X7	8.38	7.60	50
DN25	mm	25.4	127	165	160	125	64	346.65	364.15	304	411.3	195.05	212.55	152.4	259.7	187	108	7.54		7.2	(F04)	42		4.6	4.25	85
1"	inch	1	5	6.5	6.3	4.92	2.52	13.65	14.34	11.97	16.19	7.68	8.37	6	10.22	7.36	4.25	0.3	7/16" UNF	0.28		1.65	M5X7	10.14	9.37	105

Cryogenic Flanged Full Port Floating Ball

Components & materials

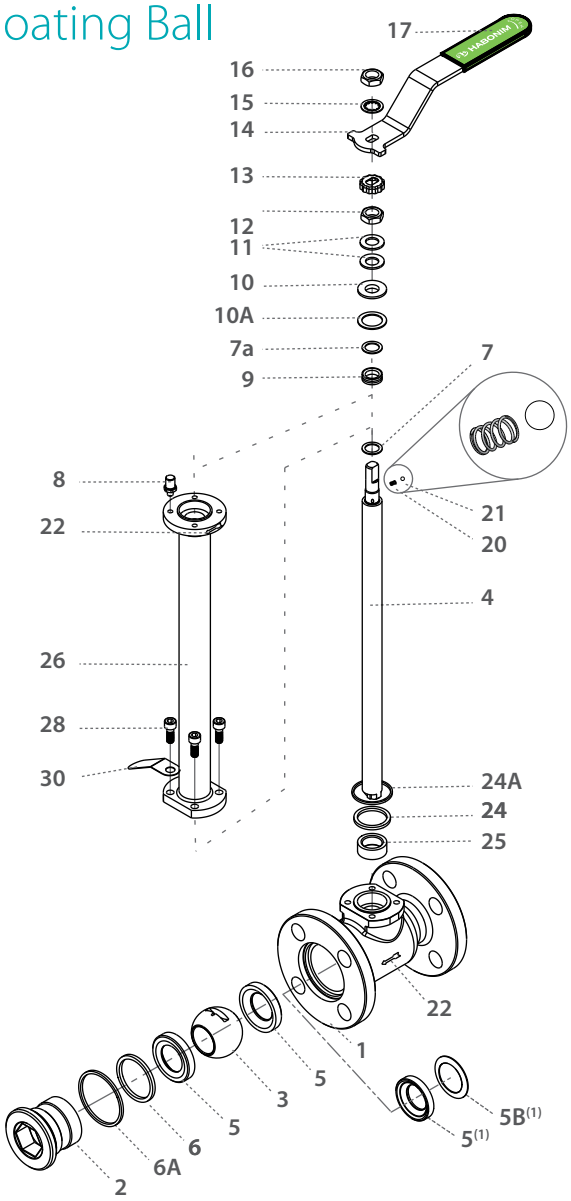

Item	Description	Material specifications	Qty.
1	Body	Acc. Ordering Code	1
2	Plug	Acc. Ordering Code	1
3	Ball	Acc. Ordering Code	1
4	Stem	Acc. Ordering Code	1
5*	Seat	Acc. Ordering Code	2
5B	Upstream seat spring	Inconel 718	1
6*	Inner seal	TFM	1
6A*	Outer seal	Acc. Ordering Code	1
7*	Stem thrust seal	PCTFE	1
7a*	Anti-abrasion ring	PCTFE	1
8	Stop pin	S. Steel	1
9*	Stem seal	TFM	1
10	Follower	S. Steel	1
10A	Slide bearing	S. Steel	1
11	Disc spring	S. Steel	2
12	Stem nut	S. Steel	1
13	Locking clip	S. Steel	1

Item	Description	Material specifications	Qty.
14	Handle	S. Steel	1
15	Serrated washer	S. Steel	1
16	Handle nut	S. Steel	1
17	Sleeve	PVC	1
20	Anti-static spring	S. Steel	1
21	Anti-static plunger	S. Steel	1
22	Arrow flow	S. Steel	2
23	Tag (not shown)	S. Steel	1
24*	Bonnet inner seal	TFM	1
24A*	Bonnet outer seal	Acc. Ordering Code	1
25*	Stem bearing	PTFE	1
26	Bonnet	S. Steel	1
28	Bolt	S. Steel	4
30	Dog tag	S. Steel	1

* Repair kit components

(1) Optional Dynemic seat design

C73 C74 C78 1½"-2" | DN40-DN50 | CLASS 150/300/PN 40

Cryogenic Flanged Full Port Floating Ball

Valve dimensions

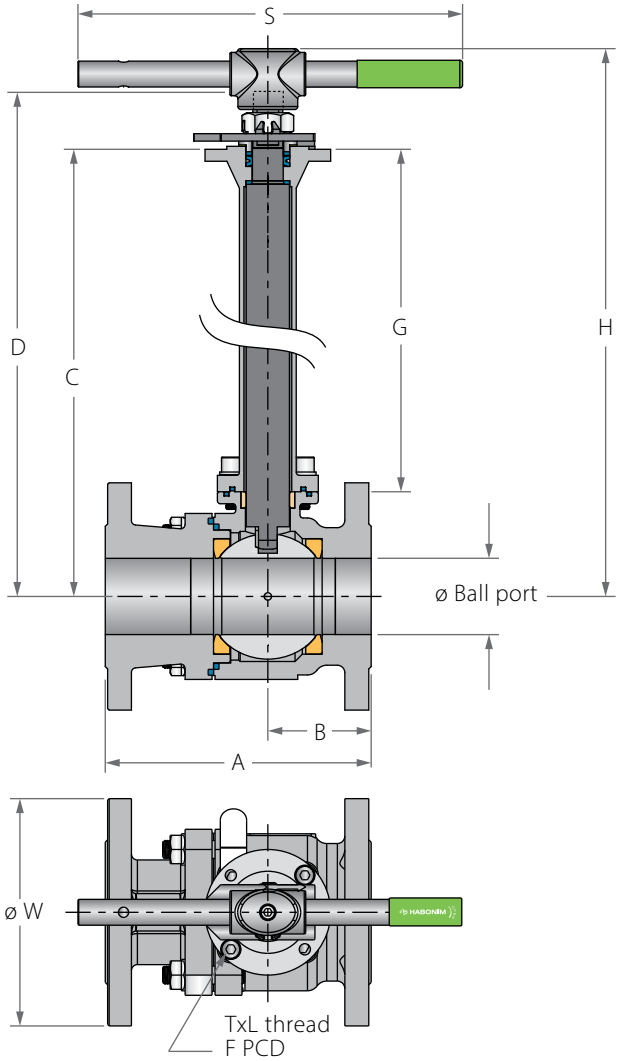

Preparation for actuation

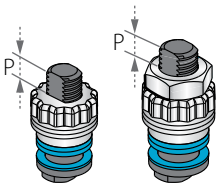

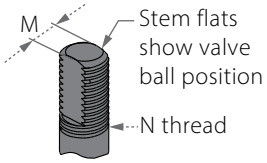

Full Port	Unit	Ball port	A_73	A_74	A_78		B	Standard design				6.0" bonnet				S	W	M	N	P	F		TxL	Weight	kg/lb	Kv
					F1	F4		C	D	G	H	C	D	G	H									Std.	6.0"	Cv
DN40	mm	38.1	165	190.5	200	-	68	352.3	381.8	304	406.6	200.65	230.15	152.4	255	237	127	8.71	9⁄16" UNF	8.5	(F05)	50	M6X8	8.5	7.93	214
1½"	inch	1.5	6.5	7.5	7.87	-	2.68	13.87	15	11.97	16.01	7.9	9.06	6	10.04	9.33	5	0.34		0.33		1.97		18.73	17.48	250
DN50	mm	51	178	216	230	150	69	397.5	439.1	327.5	430.35	222.4	264	152.4	255.25	400	152	13.9	M20x2.5	13.5	(F07)	70	M8X8	16	14.5	410
2"	inch	2.01	7.01	8.5	9.06	5.91	2.72	15.65	17.29	12.89	16.94	8.76	10.39	6	10.05	15.75	5.98	0.55		0.53		2.76		35.2	31.9	480

Cryogenic Flanged Full Port Floating Ball

Components & materials

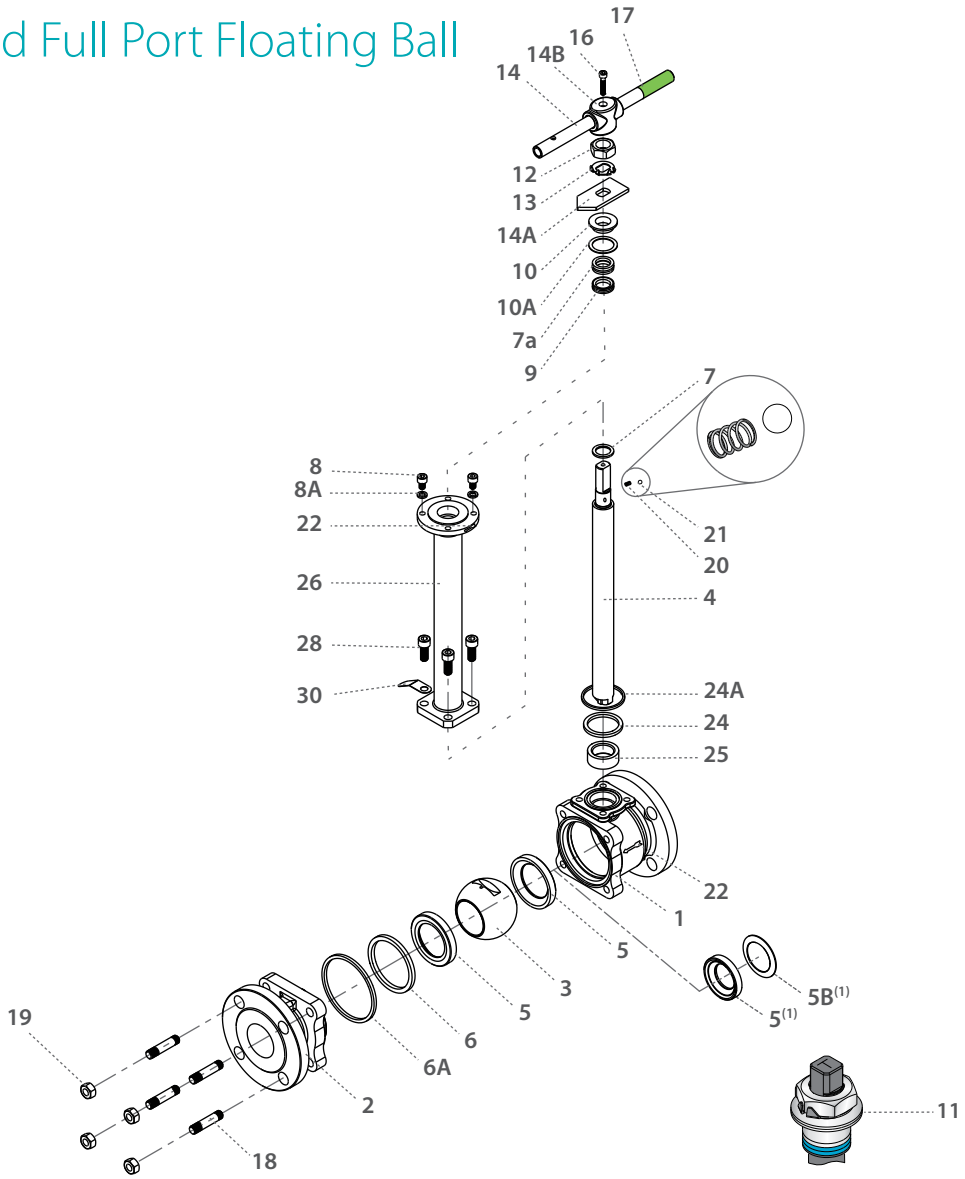

Item	Description	Material specifications	Qty.
1	Body	Acc. Ordering Code	1
2	End	Acc. Ordering Code	1
3	Ball	Acc. Ordering Code	1
4	Stem	Acc. Ordering Code	1
5*	Seat	Acc. Ordering Code	2
5B	Upstream seat spring	Inconel 718	1
6*	Inner seal	TFM	1
6A*	Outer seal	Acc. Ordering Code	1
7*	Stem thrust seal	PCTFE	1
7a*	Anti-abrasion ring	PCTFE	1
8	Stop bolt	S. Steel	2
8A	Spring washer	S. Steel	2
9*	Stem seal	TFM, Graphite	1
10	Follower	S. Steel	1
10A	Slide bearing	S. Steel	1
11	Disc spring	S. Steel	2
12	Stem nut	S. Steel	1
13	Tab lock washer	S. Steel	1
14	Handle	S. Steel	1

Item	Description	Material specifications	Qty.
14A	Stop plate	S. Steel	1
14B	Wrench head	S. Steel	1
16	Wrench bolt	S. Steel	1
17	Sleeve	PVC	1
18	Body bolt	S. Steel	4
19	Body Nut	EN3506-2 A4-80, A194 8M	4
20	Anti-static spring	S. Steel	1
21	Anti-static plunger	S. Steel	1
22	Arrow flow	S. Steel	2
23	Tag (not shown)	S. Steel	1
24*	Bonnet inner seal	TFM	1
24A*	Bonnet outer seal	Acc. Ordering Code	1
25*	Stem bearing	PTFE	1
26	Bonnet	S. Steel	1
28	Bolt	S. Steel	4
30	Dog tag	S. Steel	1

* Repair kit components

(1) Optional Dynemic seat design

C73 C74 C77 3"-8"[1] | DN80-DN200 | CLASS 150/300/PN 16

Cryogenic Flanged Full Port Floating Ball

Valve dimensions

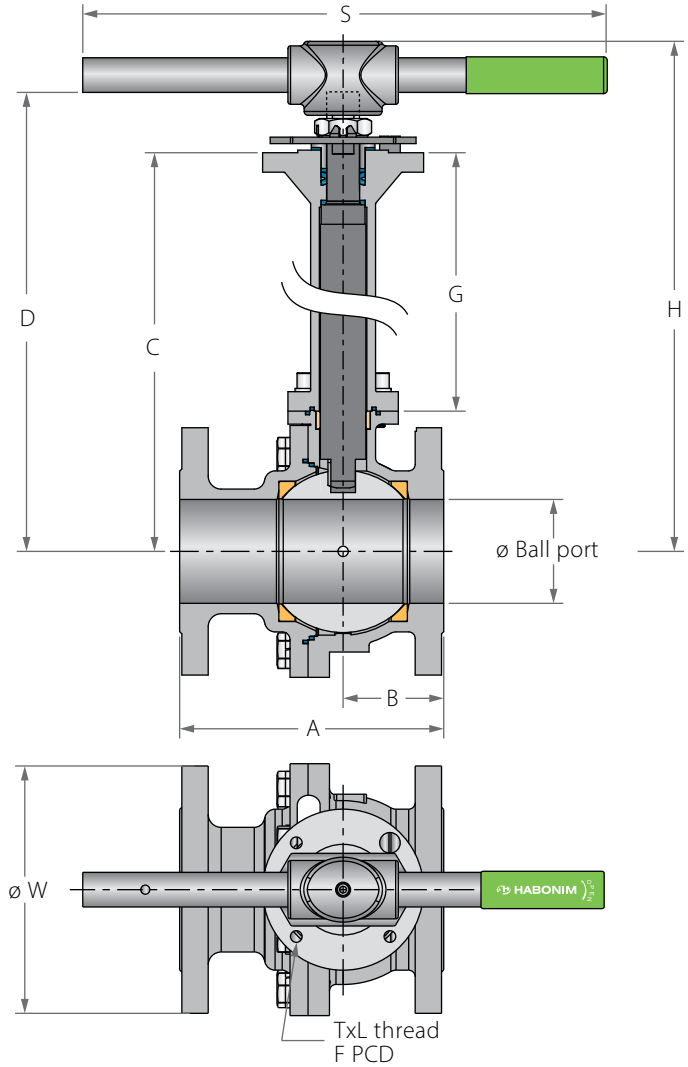

Preparation for actuation

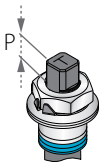

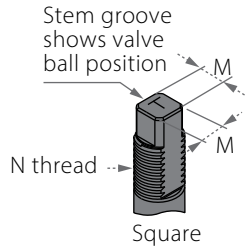

Full Port	Unit	Ball port	A_73	A_74	A_77		B	Standard design				6.0" bonnet				S	W	M	M DD	N	P	F		TxL	Weight kg/lb		Kv
					F1,F5	F4		C	D	G	H	C	D	G	H										Std.	6.0"	Cv
DN80	mm	80	203	282	310	180	77.5	441.5	488.1	343.5	538.6	250.4	297	152.4	347.5	610	190.5	18.9	15.9	1"-14 UNS-2A	16.7	(F10)	102	M10X15	27	25	1111
3"	inch	3.15	7.99	11.1	12.2	7.09	3.05	17.38	19.22	13.52	21.2	9.86	11.69	6	13.68	24.02	7.5	0.74	0.63		0.66		4.02		59.4	41.44	1300
DN100	mm	100	229	305	350	190	84.5	467.5	514.1	343.5	566.6	276.4	323	152.4	375.5	610	230	18.9	15.9	1"-14 UNS-2A	16.7	(F10)	102	M10X15	44	42	2051
4"	inch	3.94	9.02	12.01	13.78	7.48	3.33	18.41	20.24	13.52	22.31	10.88	12.72	6	14.78	24.02	9.06	0.74	0.63		0.66		4.02		67.22	64.58	2379
DN150	mm	150	394	404	350	OPT	163.5	564	633.5	385	-	331.4	400.9	152.4	-	-	279.4	28.45	23.75	1-½"-12 UNF-2A	26.2	(F12)	125	M12X15	97	93.5	4615
6"	inch	5.91	15.51	15.91	1378	OPT	6.44	22.2	24.94	15.16	-	13.05	15.78	6	-	-	11	1.12	0.94		1.03		4.92		154.28	145.24	5400
DN200	mm	200	457	502	-	-	242.6	627	627	385	-	394.4	463.9	152.4	-	-	343	35.9	35.9	2" UN-2A	40	(F14)	140	M16X20	210	203	7949
8"	inch	7.87	17.99	19.76	-	-	9.55	24.69	24.69	15.16	-	15.53	18.26	6	-	-	13.5	1.41	1.41		1.57		5.51		231.42	222.38	9300

(-) Due to high valve torque, pipe handle cannot be used. A manual gear or automation means should be used to operate the valve.

(1) C77 up to 6"

Cryogenic Flanged Full Port Floating Ball

Components & materials

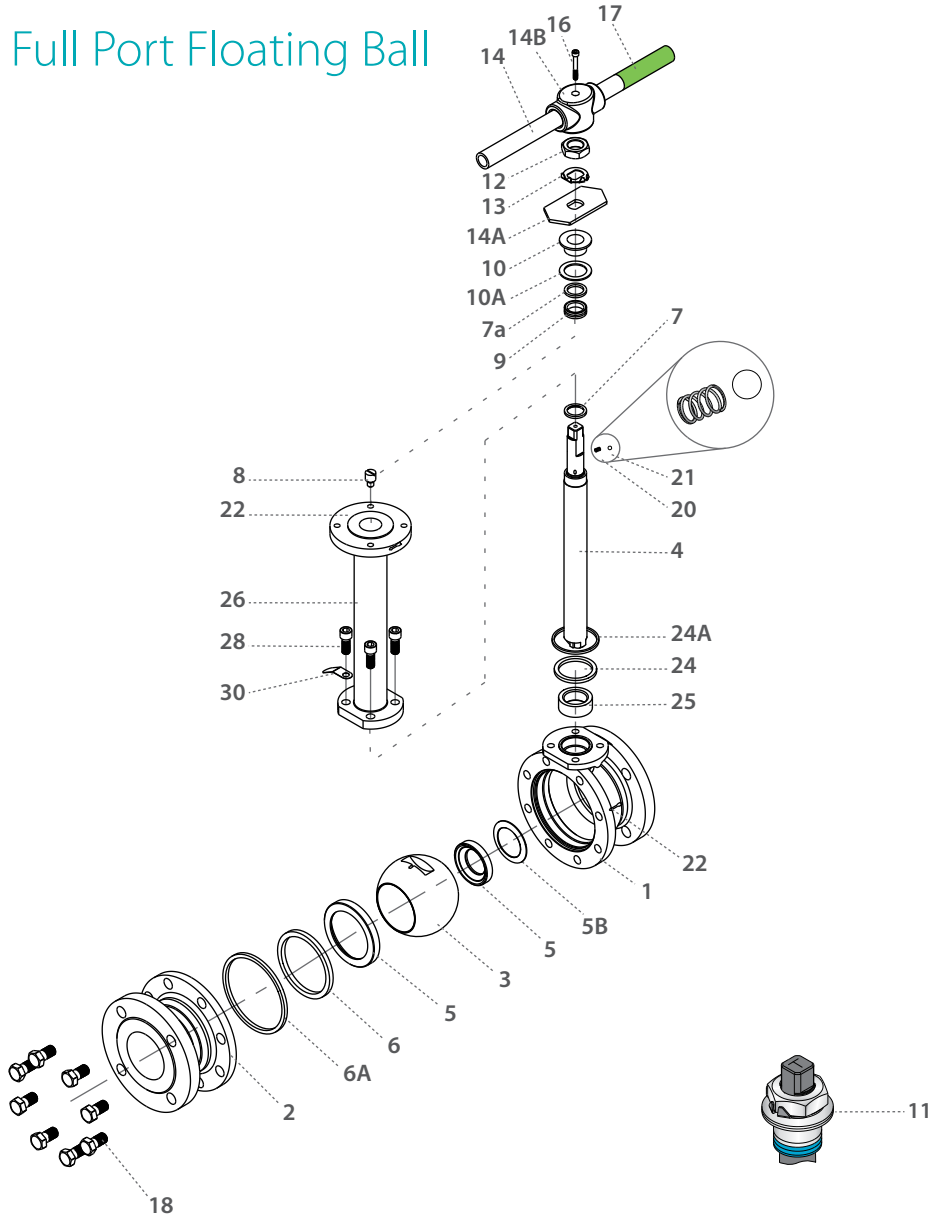

Item	Description	Material specifications	Qty.
1	Body	Acc. Ordering Code	1
2	End	Acc. Ordering Code	1
3	Ball	Acc. Ordering Code	1
4	Stem	Acc. Ordering Code	1
5*	Seat	Acc. Ordering Code	2
5B	Upstream seat spring	Inconel 718	1
6*	Inner seal	TFM	1
6A*	Outer seal	Acc. Ordering Code	1
7*	Stem thrust seal	PCTFE	1
7a*	Anti-abrasion ring	PCTFE	1
8	Stop pin	S. Steel	1
9*	Stem seal	TFM	1
10	Follower	S. Steel	1
10A	Slide bearing	S. Steel	1
11	Disc spring	S. Steel	2
12	Stem nut	S. Steel	1
13	Tab lock washer	S. Steel	1
14**	Handle	S. Steel	1
14A	Stop plate	S. Steel	1

Item	Description	Material specifications	Qty.
14B	Wrench head	S. Steel	1
16	Wrench bolt	S. Steel	1
17	Sleeve	PVC	1
18	Body bolt	S. Steel	8-10
20	Anti-static spring	S. Steel	2
21	Anti-static plunger	S. Steel	2
22	Arrow flow	S. Steel	2
23	Tag (not shown)	S. Steel	1
24*	Bonnet inner seal	TFM	1
24A*	Bonnet outer seal	Acc. Ordering Code	1
25*	Stem bearing	PTFE	1
26	Bonnet	S. Steel	1
28	Bolt	S. Steel	4
30	Dog tag	S. Steel	1

* Repair kit components

** Gear operator should be used for size 6" DN150 and above (handle components are not included)

(1) C77 up to 6"

C73 C74 C77

Cryogenic Flanged Full Port Floating Ball - Ordering Code System

"Mandatory option" options are marked with green background | "Standard offer" options are marked with light green background

1	2	3	4	5	6	7	8	9	10	11	12	13	14	15	16	17	18	19	20	21	22	23	24	.	.	.	30
1	0			F	C	4	7	W	-	6	6	6	M	C	G		/	X	B	W		-						
Size		Features				Series[1]		Design		Body/ End		Ball/ Stem		Seat/ Seals				End connection				Special features						

Size		
Code	inch	mm
02	¼"	8
03	⅜"	10
05	½"	15
07	¾"	20
10	1"	25
12	1¼"	32
15	1½"	40
20	2"	50
25	2½"	65
30	3"	80
40	4"	100
60	6"	150
80	8"	200

Features [1]	
F	Fire safe
C	Cryogenic
B	Full port
N	Control service
D	Diverter bottom entry
I	High purity Class 10000 assembly room

Series	
C47	3 Piece design
C31	ASME 150
C32	ASME 300
C73	ASME 150 Full bore
C74	ASME 300 Full bore
C77	PN16 Full bore
C78	PN40 Full bore
C26	Full bore class 600 design
C28	3 Piece high pressure
C61	Multy-port valve

Design	
W	Total HermetiX Integrity package

Body/End material	
6	S. Steel
1	Bronze
7	Monel

Ball/Stem material	
6	S. Steel
M	High Strength S. Steel

Seat material	
A	TFM
C	PCTFE
P	CF PTFE
F	Hybrid Seat - see below

Seal material	
G	Expanded graphite
T	PTFE

Special features	
RTJ	Ring Type Joint
B	Body made from rolled bar
EP	Electropolished
WR	DD stem
G..	Internal surface finish (G24, G32)
VB30	Characterized control ball
6.0	Short bonnet
FF	Flat face
BD	Bi-Directional Design
SPR	Additional spring [4]

End connections	
Welding	
BW5	Buttweld schd. 5
BW10	Buttweld schd. 10
BW	Buttweld schd. 40
BW80	Buttweld schd. 80
XBW	Extended buttweld schd. 40
SW	Socket weld
XSW	Extended socket weld
BWO	Buttweld tube OD
ETO	Extended tube OD
SWO	Socket weld tube OD
BWD	Buttweld DIN 11860
ETJ	Extended Tube JIS
FT	Flush Tank adaptive plate
FP	Flush Pipe adaptive plate
KLM	Copper tube (Imperial)
XYZ	Copper tube (Metric)
ETB	Extended copper tube
Threaded	
NPT	ASME B1.20.1 - National Pipe Taper thread
MNPT	Male NPT
BSPT	EN 10226-1 - British Standard Pipe Taper thread
MBSPT	Male BSPT
DIN2999	EN 10226-1 - British Standard Gasket sealing threaded conecction
DIN3852	EN 10226-1 - British Standard Pipe parallel thread
AS5202	SAE internal straight thread
Clamp	
LL	Compression fitting (Imperial)
LM	Compression fitting (metric)
TC	Tri-Clamp
GR	Graylock
Flanged	
150	ASME B16.5 #150 RF
300	ASME B16.5 #300 RF
600	ASME B16.5 #600 RF
900	ASME B16.5 #900 RF
PN16	EN1092 PN16 RF
PN40	EN1092 PN40 RF
PN64	EN1092 PN64 RF
PN100	EN1092 PN100 RF
PN160	EN1092 PN160 RF

Hybrid seats code system

15	24		25		26		27	
Hybrid Seat	Insert material		Upstream / Downstream		Insert Shape		Seal Type	
F	P	CF PTFE	0	Hybrid seats on upstream and downstream, spring loaded	0	Scraper	5	Graphite
	C	PCTFE					6	TFM
	A	TFM						

[1] The cryogenic series is cleaned for O2 service as standard, no need for extra prefix.
[2] Only applicable for C47 series
[3] Not to be used as a stem material
[4] Up to 2½" with additional cost, 3" and above no need for extra prefix
As standard all Habonim cryogenic valves come with an anti-static device.
In some applications the available options above are limited to specific sizes please consult with Habonim for details.

About Habonim

Ball Valves & Actuators for the most demanding, challenging and hazardous applications are our passion and profession for the last 70 years.

We believe in designing, manufacturing and supplying control and shutoff components and solutions that improves the overall safety, integrity and sustainability of the systems they areinstalled in.

Designed, manufactured and tested according to the highest standards, our products allow us to partner within systems that flow and control varied gases and liquids in diverse markets especially where extreme temperatures and pressures are involved, hazardous materials are used and system performances are critical.

We are leading in cryogenic ball valve-based control solutions, emergency shutoff and specially designed solutions.

Believing that supplying and developing the most effective, safe and reliable products for the global leaders in the LNG and Gas distribution market continually challenges us to improve our capabilities and products.

Best coping with our prestigious customers' most challenging requirements technically, operationally and commercially is our promise fulfilled for decades.

Performing in Demanding Applications.

YP0005121 CAT-PRD-CRYO-M ver:0220

HABONIM
Industrial Valves & Actuators

Habonim USA 1 866 261 8400 | **Habonim EU** +34 640 384 759 | **Habonim Singapore** +65 8127 0221 | **Habonim China** +86 21 58056370
Habonim Israel +972 (0) 4 691 4911 | **Habonim UK** +44 1633 484554 | **Habonim Australia** +61 400 001 988 | **www.habonim.com**